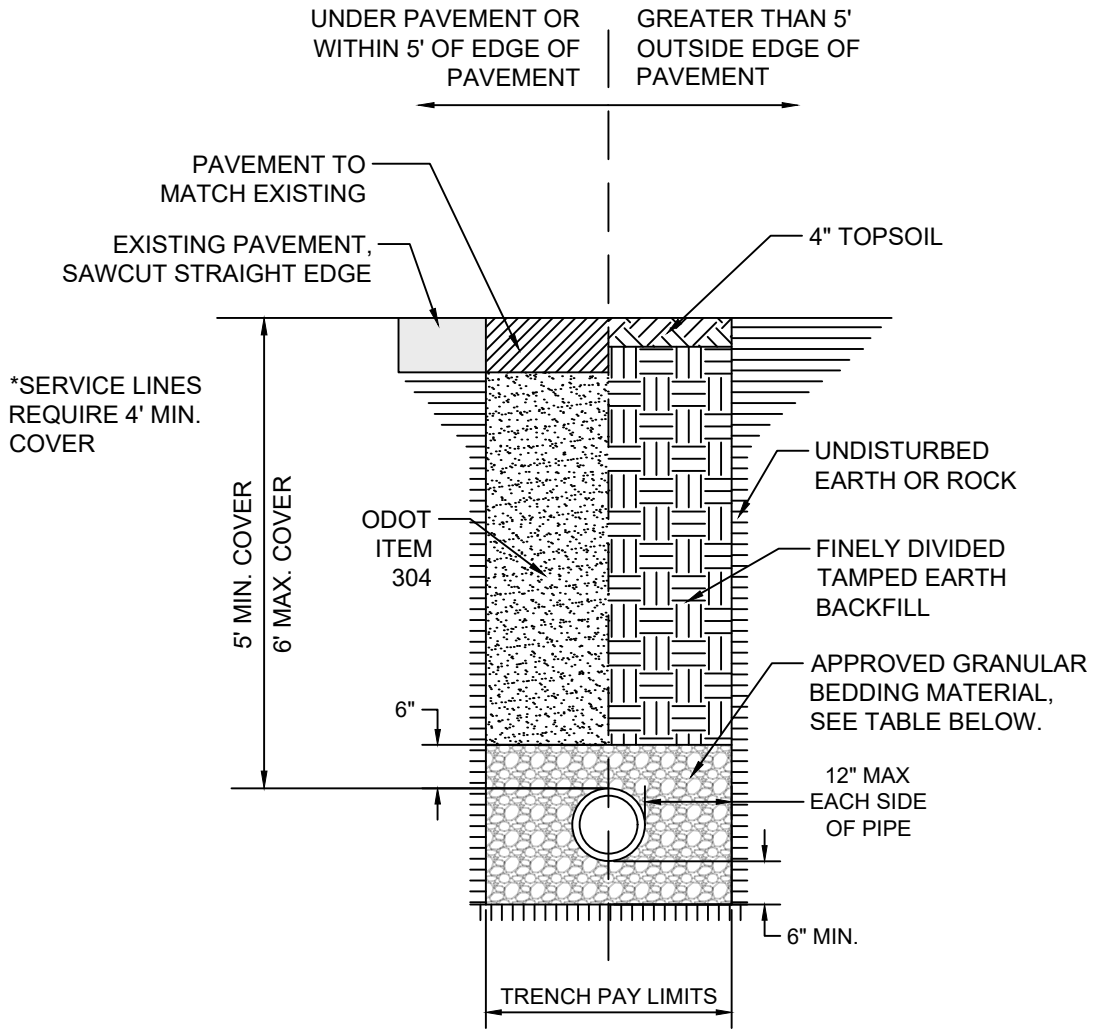

AWWA STANDARD	PIPE MATERIAL	BEDDING MATERIAL
C-900, C-905	PVC	#8 STONE
C-909	PVCO	#8 STONE
C-151	DUCTILE IRON	SAND

WATERLINE TRENCH DETAIL

CITY OF BOWLING GREEN
PUBLIC WORKS DEPARTMENT
ENGINEERING DIVISION

STD DWG 1
SH 1 OF 1
REV 03/2019

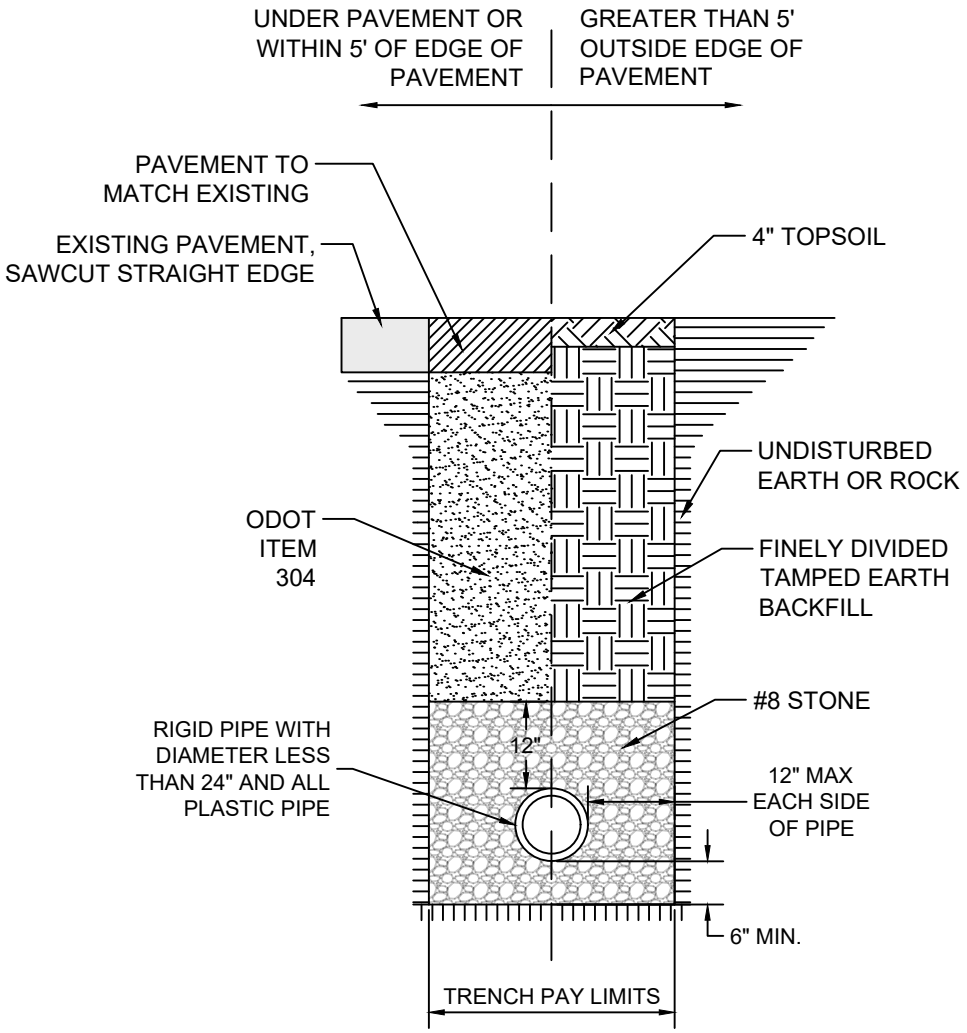

NOTE: SERVICE CONNECTIONS SHALL BE INSTALLED WITH A 10' SECTION OF PIPE BEDDED IN CLAY SOILS OR BENTONITE

SEWERLINE TRENCH DETAIL
RIGID PIPE <24" AND ALL PLASTIC PIPE

CITY OF BOWLING GREEN PUBLIC WORKS DEPARTMENT ENGINEERING DIVISION	STD DWG 2
	SH 1 OF 3
	REV 03/2019

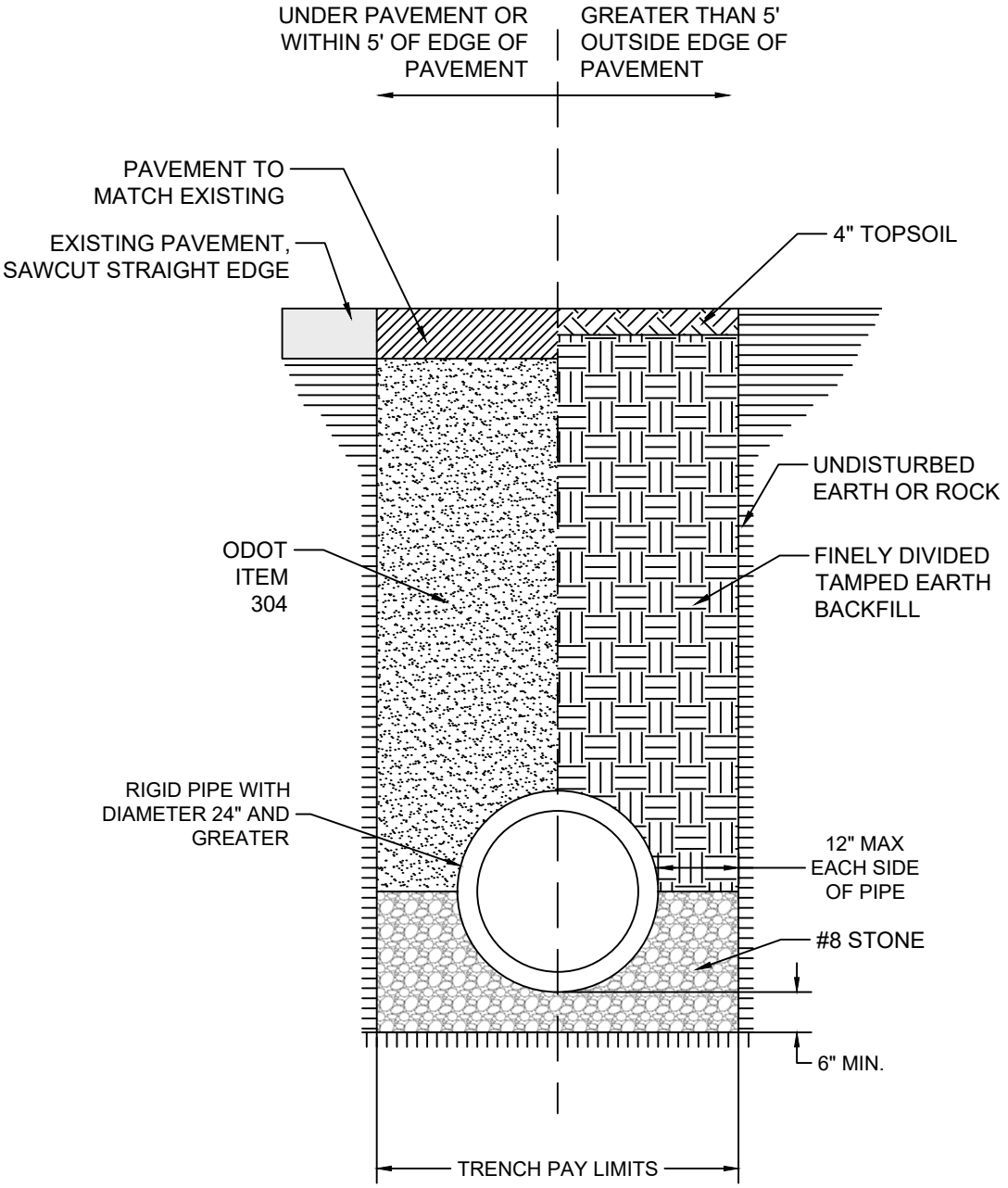

NOTE: SERVICE CONNECTIONS SHALL BE INSTALLED WITH A 10' SECTION OF PIPE BEDDED IN CLAY SOILS OR BENTONITE

SEWERLINE TRENCH DETAIL
RIGID PIPE ≥ 24"

CITY OF BOWLING GREEN
PUBLIC WORKS DEPARTMENT
ENGINEERING DIVISION

STD DWG 2
SH 2 OF 3
REV 03/2019

SEWER MAIN SERVICE CONNECTION

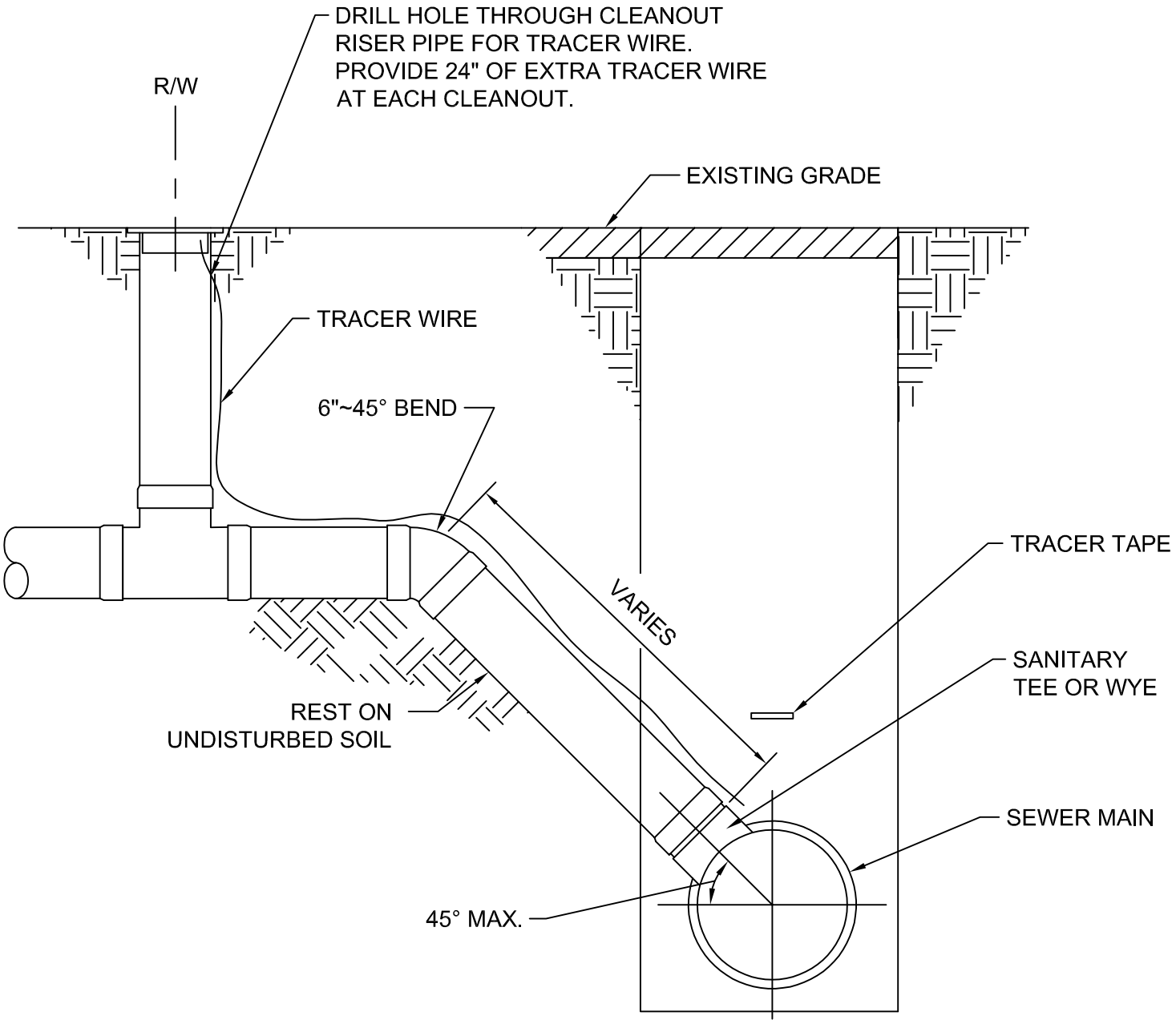

NOTE: SEE STD DWG 2 SHT 1 FOR TRENCH
BEDDING & BACKFILL INFORMATION

SEWERLINE SERVICE CONNECTION	
CITY OF BOWLING GREEN PUBLIC WORKS DEPARTMENT ENGINEERING DIVISION	STD DWG 2 SH 3 OF 3 REV 03/2019

MANHOLE COLLAR DETAIL AND CASTING ADJUSTMENT

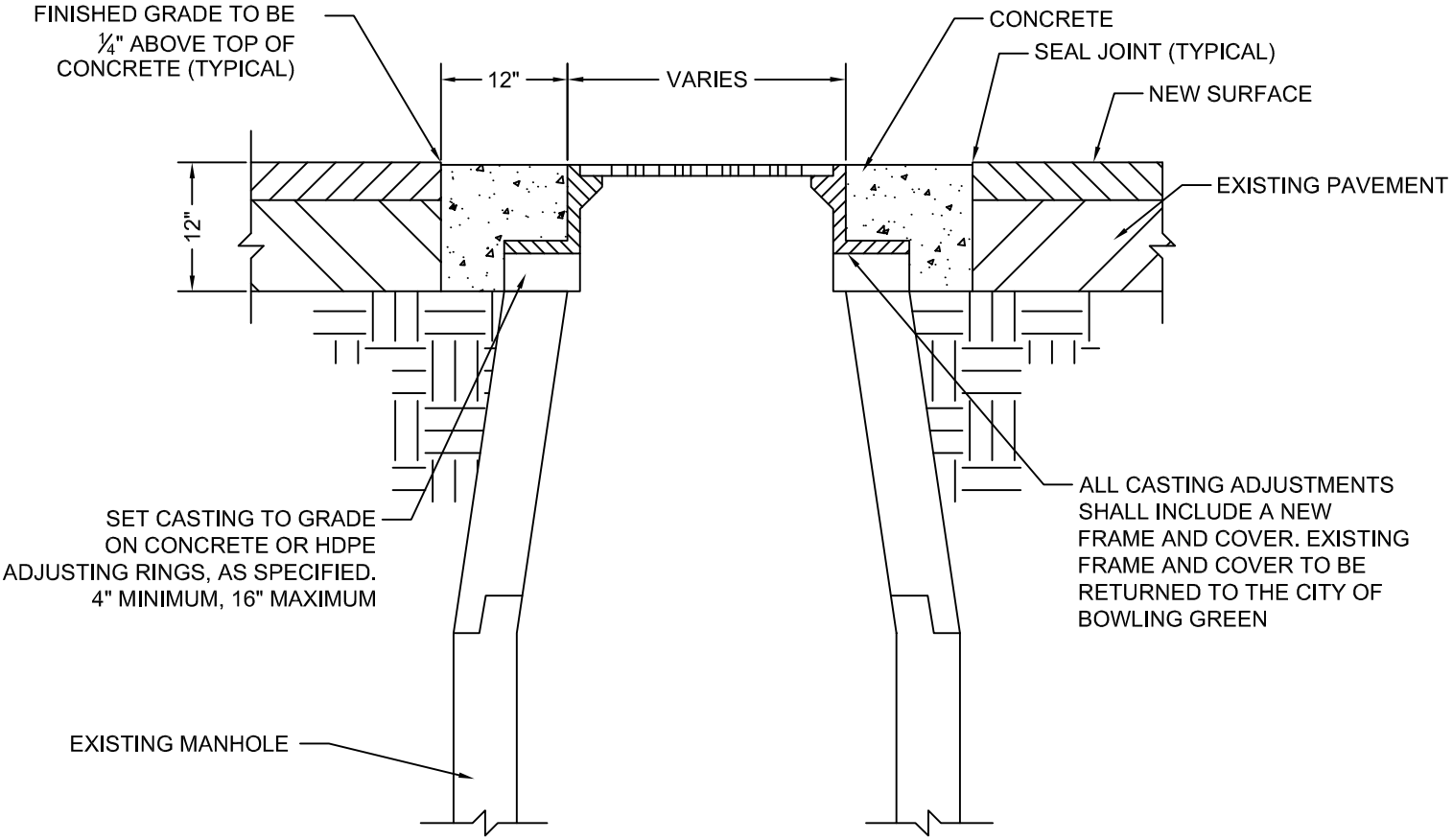

STEP 1. THE ASPHALT CONCRETE INCLUDING INTERMEDIATE AND SURFACE COURSES SHALL BE LAID CONTINUOUSLY OVER THE CASTING. SPECIAL PRECAUTIONS SHALL BE TAKEN BY THE CONTRACTOR, THE ENGINEER AND THE INSPECTOR FOR THE MARKING AND RE-ESTABLISHMENT OF THE LOCATIONS OF THE CASTINGS.

STEP 2. AFTER COMPLETELY PLACING AND COMPACTING THE ASPHALT CONCRETE, THE NECESSARY WIDTH OF THE STREET SHALL BE BARRICADED OFF. THE NEW ASPHALT CONCRETE SURFACE AND THE OLD PAVEMENT SHALL BE CUT AWAY WITH A CIRCULAR CORING DEVICE (MR. MANHOLE OR EQUIVALENT) AT THE REQUIRED DIAMETER AROUND EACH CASTING DOWN TO THE EXISTING BEARING OF THE FLANGE OF THE CASTINGS AS DETAILED.

STEP 3. THE CASTING SHALL THEN BE RAISED TO ¼" BELOW THE NEW ASPHALT CONCRETE SURFACE AND SET TO GRADE. THE EXCAVATED AREA AROUND THE CASTING SHALL THEN BE FILLED AND COMPACTED TO ¼" BELOW THE NEW SURFACE WITH HIGH-EARLY STRENGTH CONCRETE AS SPECIFIED BY THE ENGINEER. THE CONCRETE SHALL BE ALLOWED TO CURE AT LEAST TWENTY-FOUR (24) HOURS BEFORE THE STREET IS OPENED TO TRAFFIC.

NOTE: CURB INLET CATCH BASIN CASTINGS ARE NOT INCLUDED IN THE ABOVE METHOD.

MANHOLE COLLAR DETAIL CASTING ADJUSTMENT	
CITY OF BOWLING GREEN PUBLIC WORKS DEPARTMENT ENGINEERING DIVISION	STD DWG 3 SH 1 OF 5 REV 03/2019

TYPE MH 3-4

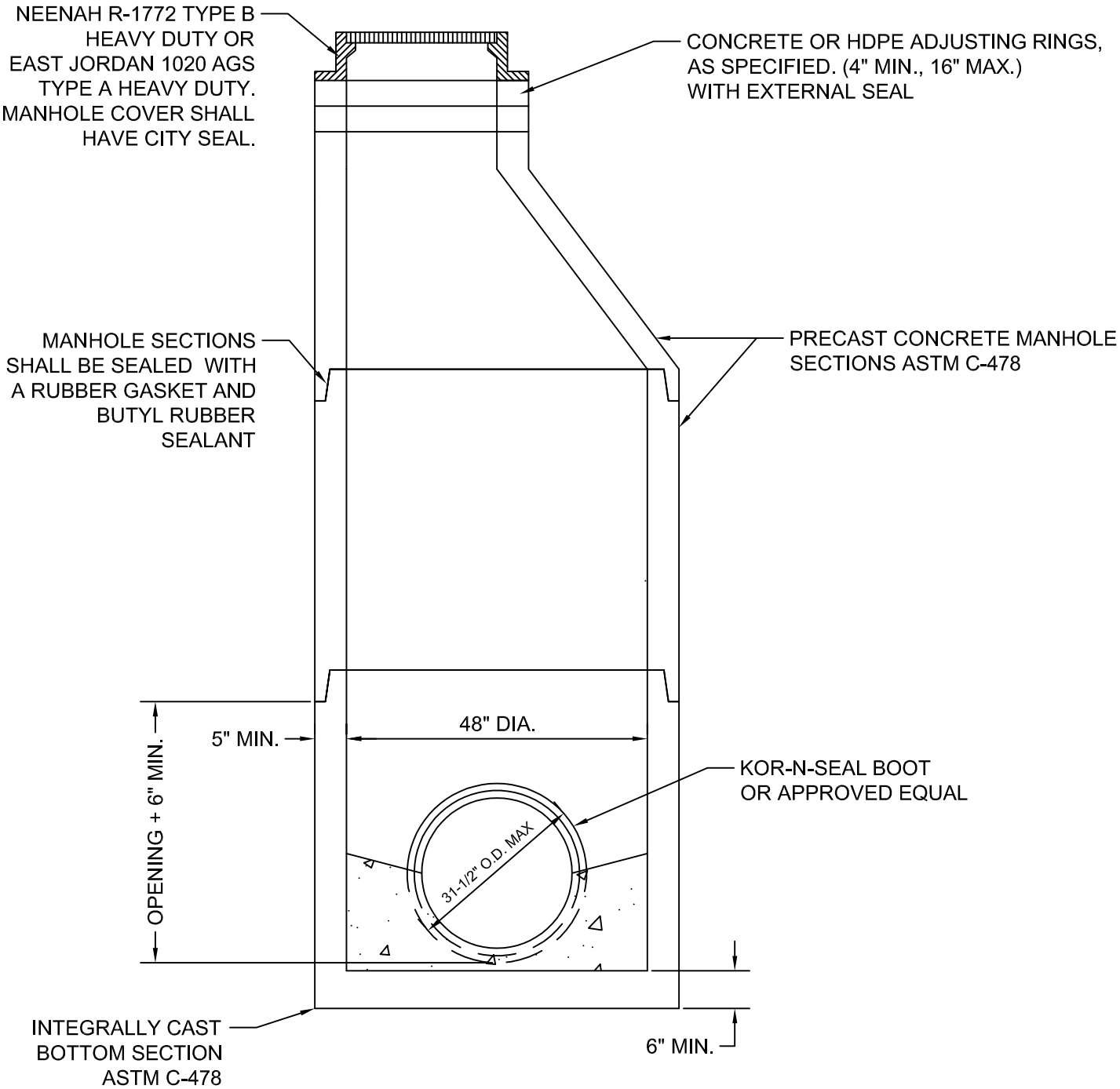

JOINTS BETWEEN SLAB TOP RISER SECTIONS AND BASE SHALL BE "O RING TYPE ASTM C-443

CASTING SHALL BE CAST WITH THE WORDS "SANITARY". "SEWER" OR "STORM" AS DIRECTED BY THE ENGINEER AND HAVE THE CITY SEAL.

MANHOLE DETAIL TYPE MH 3-4	
CITY OF BOWLING GREEN PUBLIC WORKS DEPARTMENT ENGINEERING DIVISION	STD DWG 3
	SH 2 OF 5
	REV 03/2019

TYPE MH 3-5

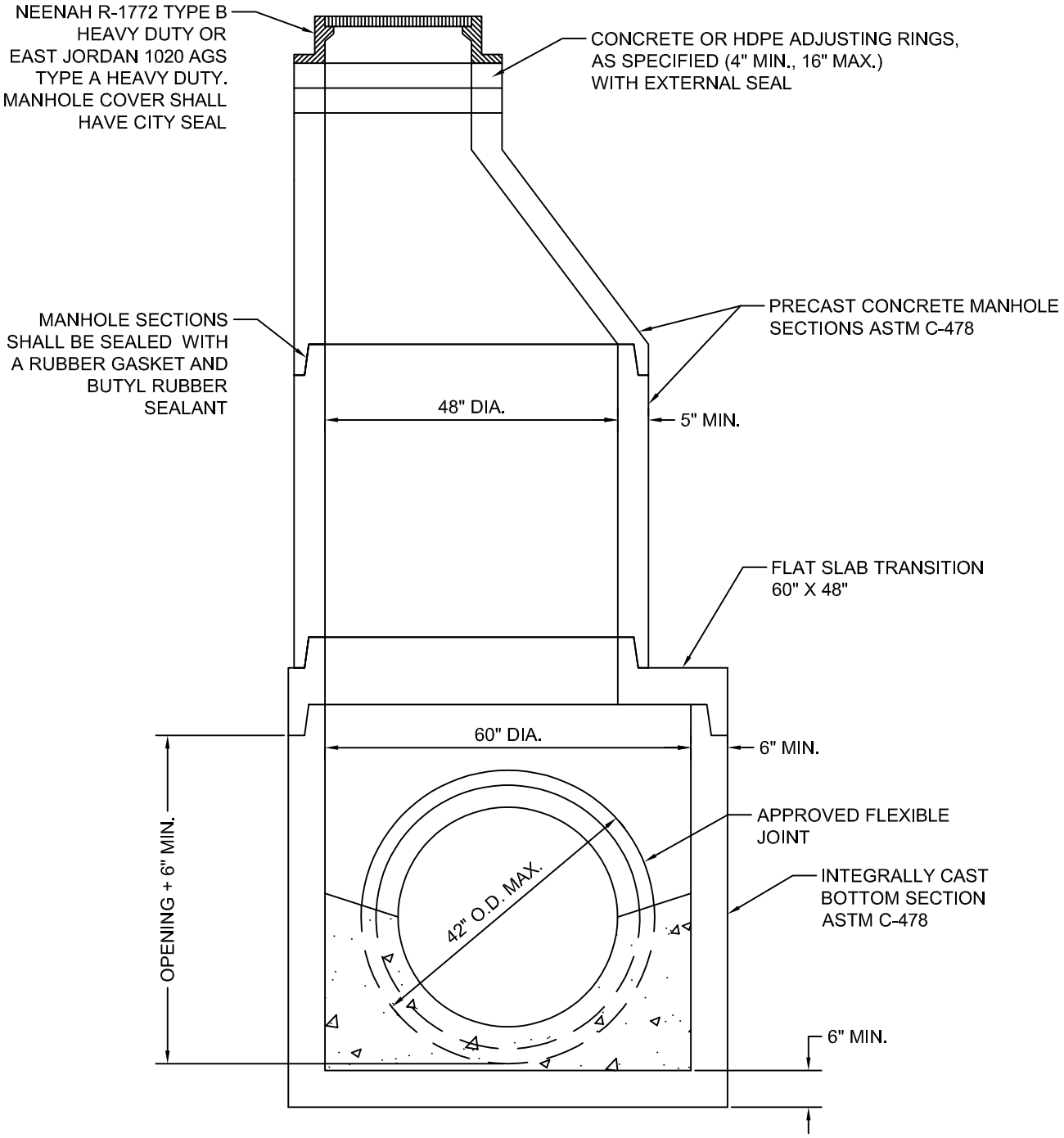

JOINTS BETWEEN SLAB TOP, RISER SECTIONS AND BASE SHALL BE "O" RING TYPE ASTM C-443

CASTING SHALL BE CAST WITH THE WORDS "SANITARY", "SEWER" OR "STORM" AS DIRECTED BY THE ENGINEER AND HAVE THE CITY SEAL.

MANHOLE DETAIL TYPE MH 3-5	
CITY OF BOWLING GREEN PUBLIC WORKS DEPARTMENT ENGINEERING DIVISION	STD DWG 3
	SH 3 OF 5
	REV 03/2019

TYPE MH 3-6

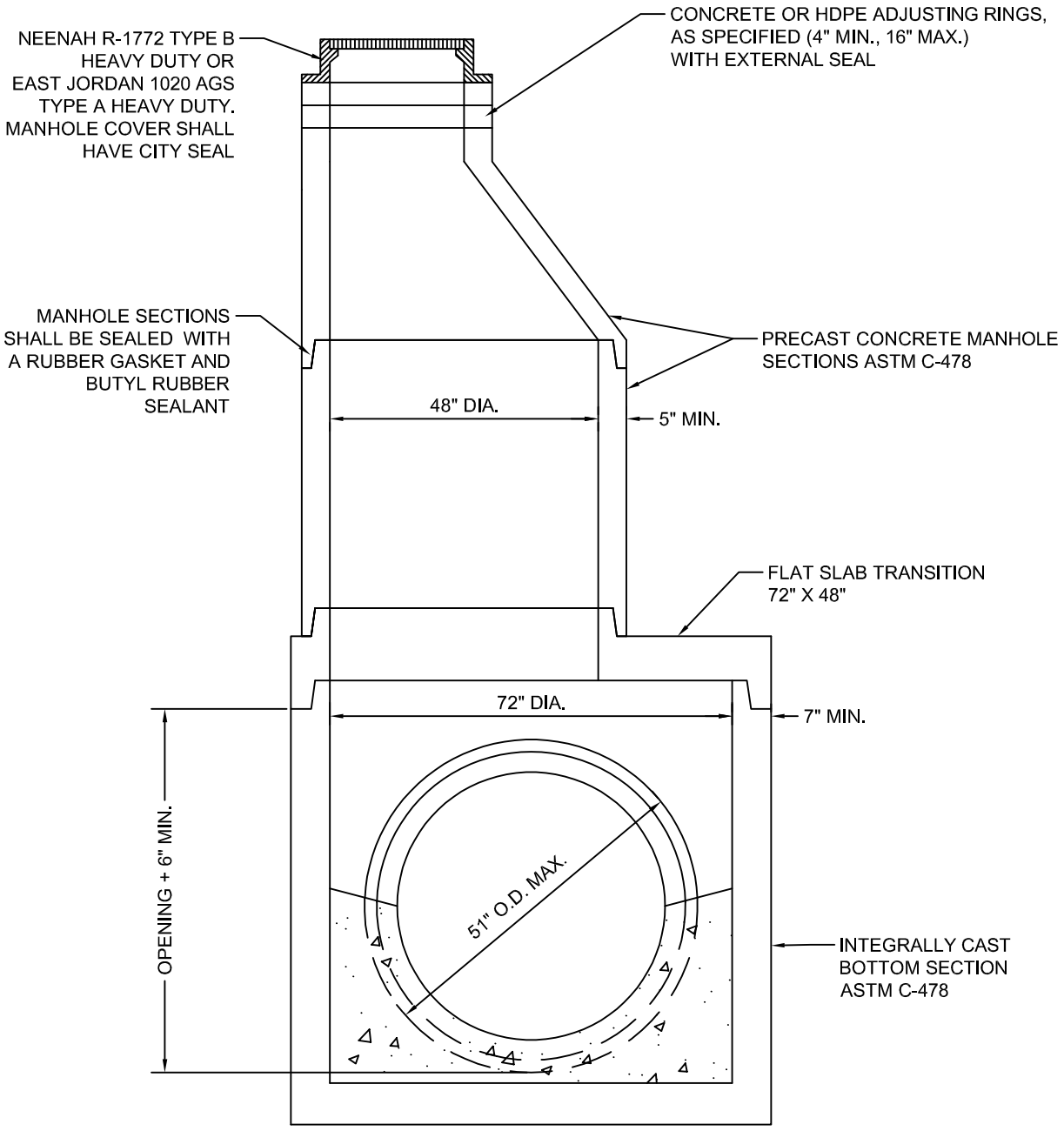

JOINTS BETWEEN SLAB TOP, RISER SECTIONS AND BASE SHALL BE "O" RING TYPE ASTM C-443

CASTINGS SHALL BE CAST WITH THE WORDS "SANITARY", "SEWER", OR "STORM AS DIRECTED BY THE ENGINEER AND HAVE THE CITY SEAL.

MANHOLE DETAIL TYPE MH 3-6	
CITY OF BOWLING GREEN PUBLIC WORKS DEPARTMENT ENGINEERING DIVISION	STD DWG 3
	SH 4 OF 5
	REV 03/2019

TYPE MH 3-7

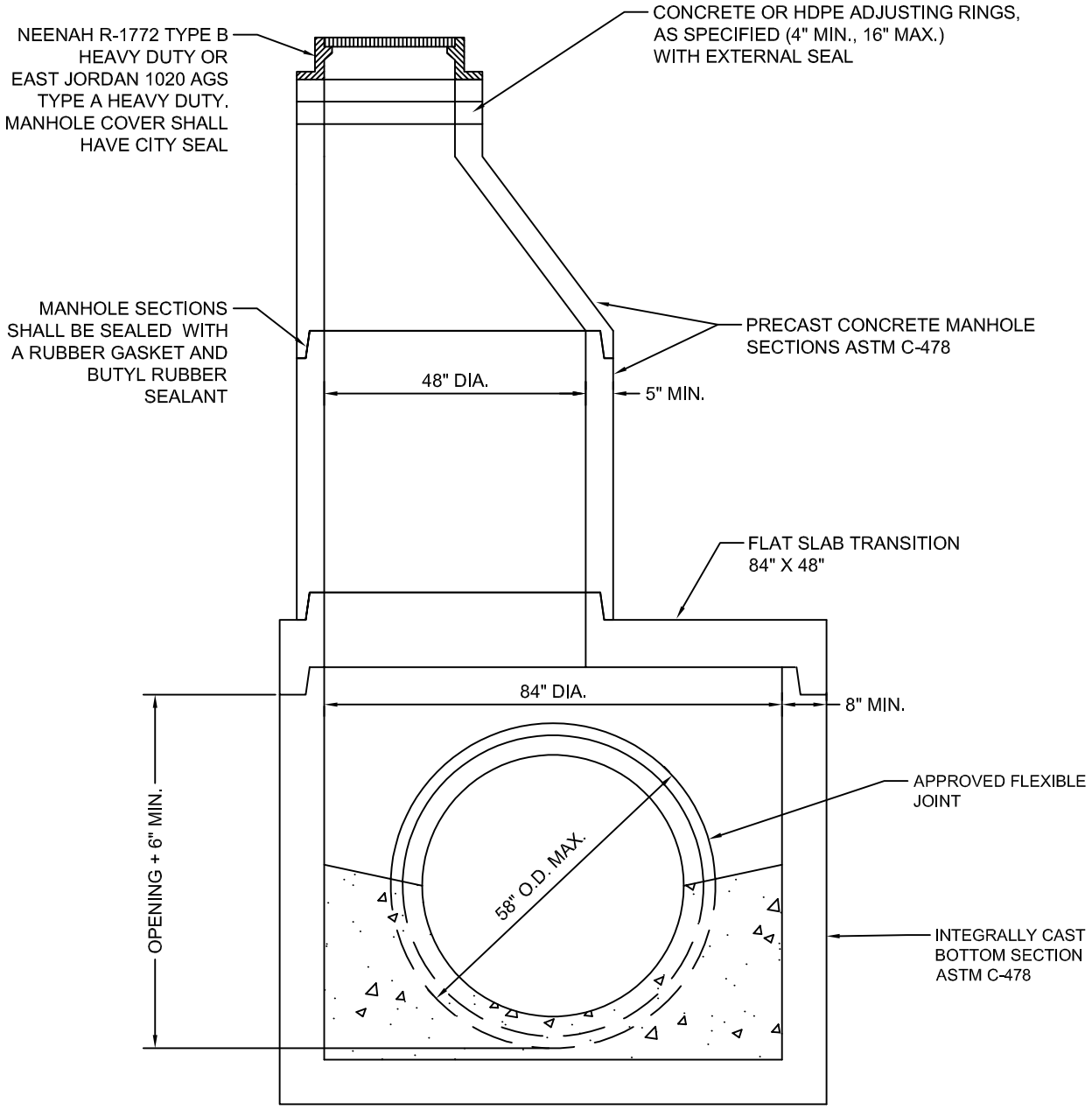

JOINTS BETWEEN SLAB TOP, RISER SECTIONS AND BASE SHALL BE "0" RING TYPE ASTM C-443

CASTING SHALL BE CAST WITH THE WORDS "SANITARY", "SEWER" OR "STORM" AS DIRECTED BY THE ENGINEER AND HAVE THE CITY SEAL.

MANHOLE DETAIL TYPE MH 3-7	
CITY OF BOWLING GREEN PUBLIC WORKS DEPARTMENT ENGINEERING DIVISION	STD DWG 3
	SH 5 OF 5
	REV 03/2019

CATCH BASIN TYPE	CURB TYPE	CASTING NO. NEENAH	CASTING NO. EAST JORDAN
4-1	N/A	R-2502*	1022-2**
4-2	ODOT TYPE 2	R-3274-A****	7022-T1***
4-3	ODOT TYPE 3	R-3237-1	7060
4-6	ODOT TYPE 6	R-3274	7020-T1***

* - TYPE D GRATE
** - TYPE M1 GRATE
*** - PROVIDE STAINLESS STEEL ANCHOR BOLTS IN HOOD
**** - WHERE ADDITIONAL DRAINAGE CAPACITY IS NEEDED USE R-3246, R-3295 OR R-3295-2 OR APPROVED EQUAL, ADJUST INSIDE DIMENSIONS OF BASIN AS NEEDED.

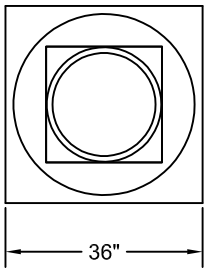

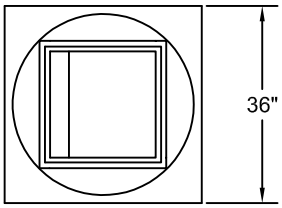

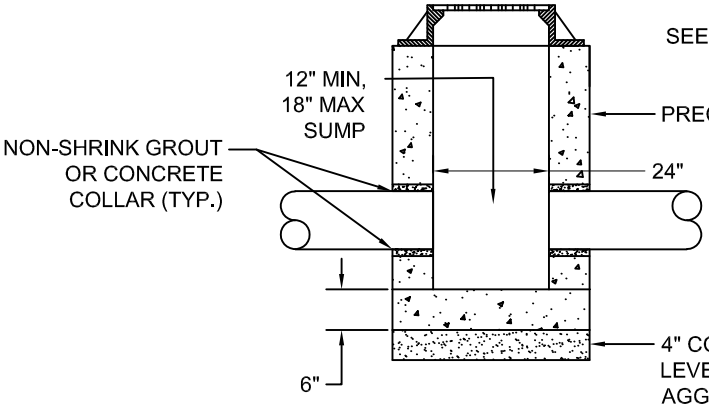

TYPICAL WITHOUT CURB INLET,
TYPICAL WITHOUT TRAP

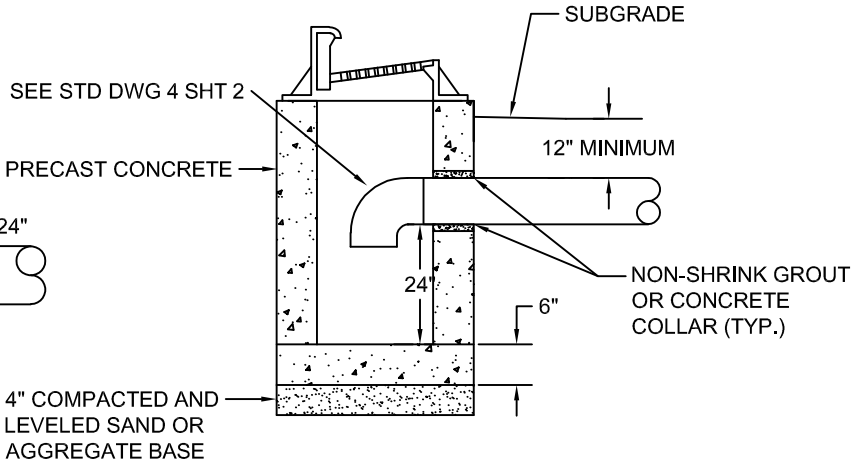

TYPICAL WITH CURB INLET,
TYPICAL WITH TRAP
FOR COMBINED SEWER ONLY

NOTES:

1. MASONRY BLOCK MAY BE USED WITH APPROVAL BY THE ENGINEER. BLOCK SHALL BE 8" THICK AND PLASTERED INSIDE AND OUT.
2. PRECAST WALLS SHALL BE 6" THICK MIN. AND DESIGNED FOR TRAFFIC AND SHIPPING/PLACEMENT LOADS. KNOCK OUT PANELS WILL ONLY BE PERMITTED WHERE A PIPE ENTERS THE STRUCTURE.

CATCH BASIN DETAIL

CITY OF BOWLING GREEN
PUBLIC WORKS DEPARTMENT
ENGINEERING DIVISION

STD DWG 4
SH 1 OF 2
REV 03/2019

TRAP DETAIL

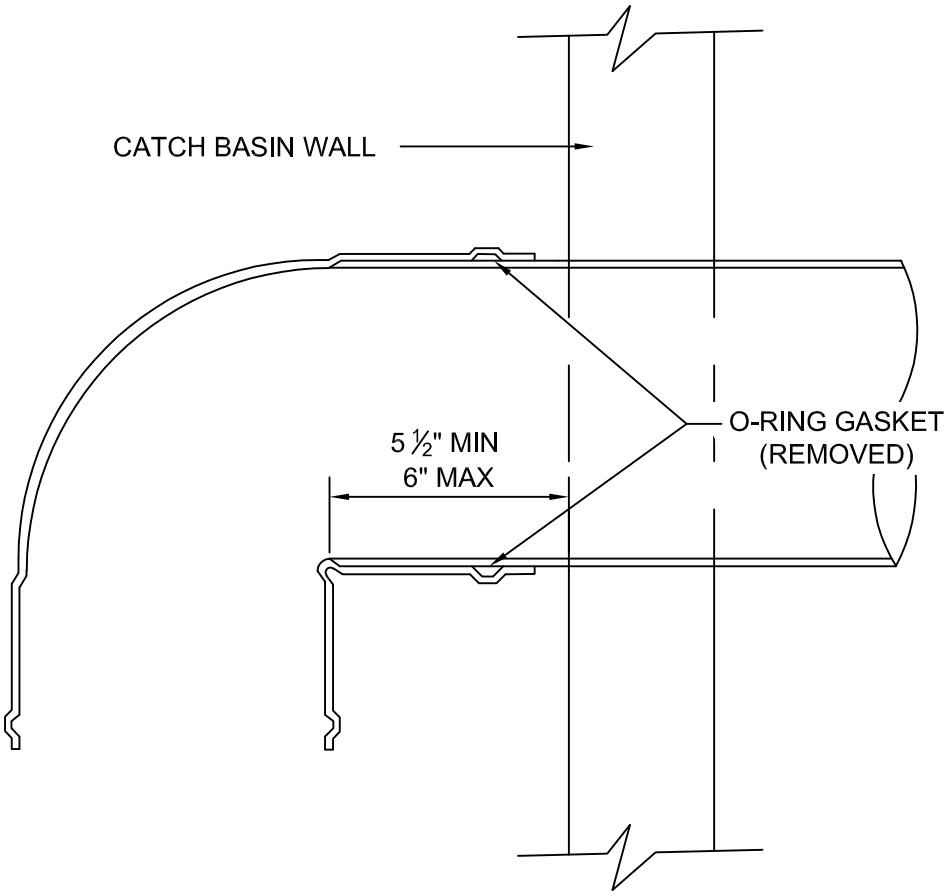

NOTE: TRAP FOR COMBINATION SEWER ONLY

CATCH BASIN DETAIL **TRAP DETAIL**	
CITY OF BOWLING GREEN PUBLIC WORKS DEPARTMENT ENGINEERING DIVISION	STD DWG 4 SH 2 OF 2 REV 03/2019

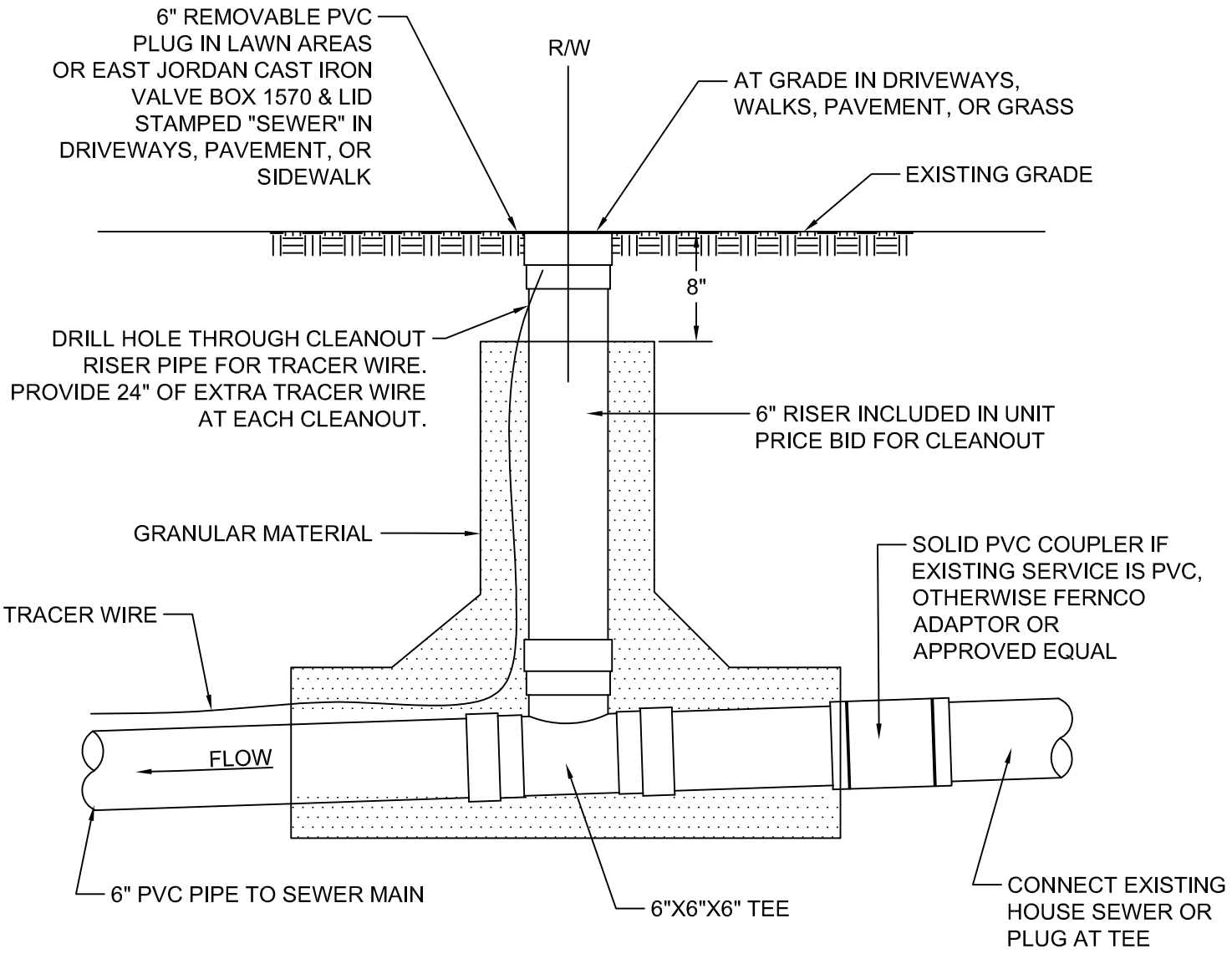

NOTE:

1. THREADED CLEANOUT LIDS SHALL NOT BE ALLOWED

SEWER CLEANOUT DETAIL

CITY OF BOWLING GREEN PUBLIC WORKS DEPARTMENT ENGINEERING DIVISION	STD DWG 5 SH 1 OF 1 REV 03/2019

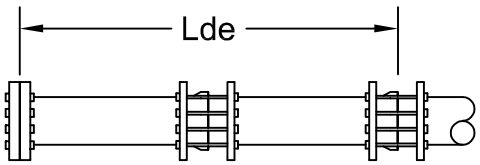

DEAD END

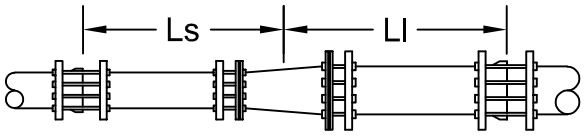

REDUCER

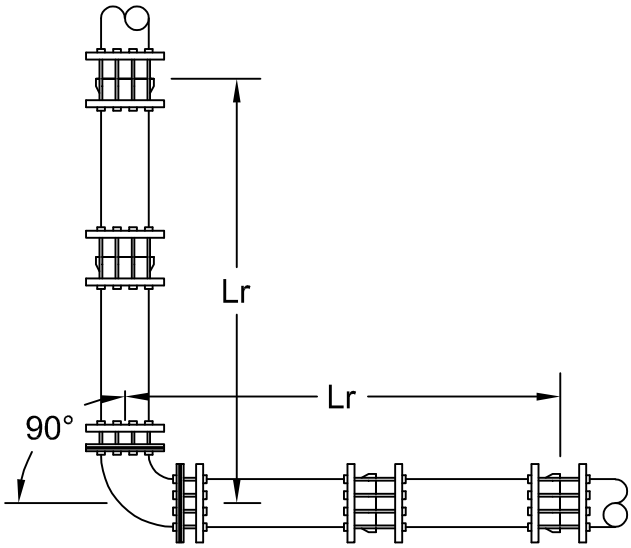

HORIZONTAL BEND

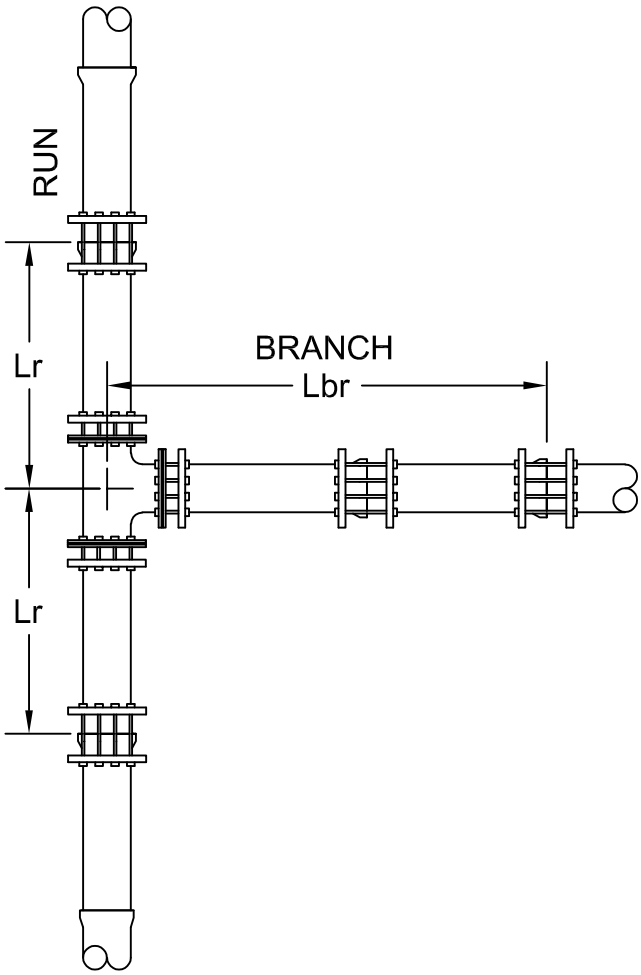

TEE

VERTICAL BENDS AND OFFSET BENDS

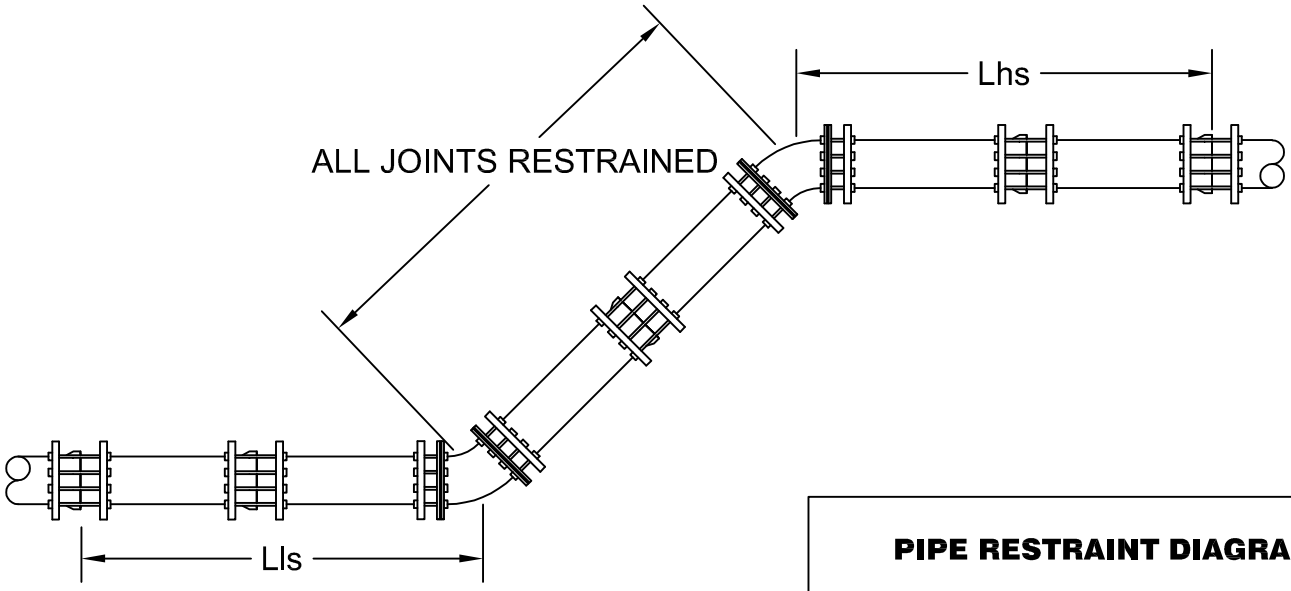

PIPE RESTRAINT DIAGRAMS

CITY OF BOWLING GREEN
PUBLIC WORKS DEPARTMENT
ENGINEERING DIVISION

STD DWG 6
SH 1 OF 3
REV 03/2019

PIPE RESTRAINT TABLES

PVC

Minimum length of pipe restrained (feet)

SIZE	HORIZONTAL BEND			VERTICAL BEND				DEAD ENDS
	90°	45°	22.5°	45°		22.5°		
	Lr	Lr	Lr	Lhs	Lls	Lhs	Lls	Lde
6"	20	8	4	18	6	9	3	44
8"	26	11	5	24	8	11	4	58
10"	32	13	6	29	10	14	5	69
12"	37	16	7	34	12	16	6	82
14"	43	18	9	39	13	19	6	94
16"	48	20	10	44	15	21	7	106
20"	59	24	12	53	19	26	9	129
24"	69	29	14	62	22	30	11	151

Pipe

RUN SIZE

BRANCH SIZE	6"	8"	10"	12"	14"	16"	20"	24"
6"	*	*	*	*	*	*	*	*
8"	8	*	*	*	*	*	*	*
10"	30	18	5	*	*	*	*	*
12"	49	39	28	18	7	*	*	*
14"	66	57	48	39	30	20	1	*
16"	81	74	66	58	50	42	25	8
20"	110	104	97	91	85	78	65	51
24"	135	130	125	120	115	109	98	87

Lbr

TEES

Minimum length of pipe restrained (feet)(Lbr)

LARGE SIZE

REDUCTION SIZE	6"	8"	10"	12"	14"	16"	20"	24"
6"		32/24	70/43	117/60	172/75	236/89	387/116	570/140
8"			29/23	65/43	107/61	156/77	271/106	412/132
10"				29/24	62/44	101/63	193/95	306/123
12"					28/24	61/45	138/81	231/111
14"						28/24	93/64	173/98
16"							57/45	127/82
20"								55/45
24"								

Ls/L_1

REDUCERS

Minimum length of pipe restrained (L_1)(feet)

DUCTILE IRON

Minimum length of pipe restrained (feet)

SIZE	HORIZONTAL BEND			VERTICAL BEND				DEAD ENDS
	90°	45°	22.5°	45°		22.5°		
	Lr	Lr	Lr	Lhs	Lls	Lhs	Lls	Lde
6"	21	9	4	12	6	6	3	28
8"	27	11	5	15	8	7	4	37
10"	33	14	7	18	10	9	5	44
12"	39	16	8	22	12	10	6	52
14"	44	18	9	25	13	12	6	60
16"	50	21	10	28	15	13	7	68
20"	61	25	12	34	18	16	9	82
24"	72	29	14	40	22	19	10	96

Pipe

RUN SIZE

BRANCH SIZE	6"	8"	10"	12"	14"	16"	20"	24"
6"	9	3	*	*	*	*	*	*
8"	22	18	13	8	3	*	*	*
10"	33	29	25	21	17	13	5	*
12"	42	39	36	33	30	26	20	13
14"	51	49	46	43	41	38	32	26
16"	60	58	56	53	51	48	43	38
20"	76	75	73	71	69	67	63	59
24"	91	90	88	87	85	84	80	77

Lbr

TEES

Minimum length of pipe restrained (feet)(Lbr)

LARGE SIZE

REDUCTION SIZE	6"	8"	10"	12"	14"	16"	20"	24"
6"		20/16	45/27	75/38	111/48	151/57	248/74	366/89
8"			19/15	42/28	69/39	100/49	174/68	264/84
10"				18/15	40/28	65/40	124/60	196/78
12"					18/15	39/29	88/51	148/71
14"						18/15	59/41	110/62
16"							37/29	81/52
20"								35/29
24"								

Ls/L_1

REDUCERS

Minimum length of pipe restrained (L_1)(feet)

DUCTILE IRON W/POLYETHYLENE WRAP

Minimum length of pipe restrained (feet)

SIZE	HORIZONTAL BEND			VERTICAL BEND				DEAD ENDS
	90°	45°	22.5°	45°		22.5°		
	Lr	Lr	Lr	Lhs	Lls	Lhs	Lls	Lde
6"	36	15	7	28	11	14	5	68
8"	48	20	10	37	15	18	7	89
10"	57	24	11	44	18	21	9	107
12"	68	28	13	52	21	25	10	126
14"	78	32	15	60	24	29	12	144
16"	88	36	17	67	27	32	13	163
20"	107	44	21	82	33	39	16	198
24"	125	52	25	96	39	46	19	232

Pipe

RUN SIZE

BRANCH SIZE	6"	8"	10"	12"	14"	16"	20"	24"
6"	21	7	*	*	*	*	*	*
8"	53	42	31	19	7	*	*	*
10"	79	70	60	51	42	32	12	*
12"	102	95	87	80	72	64	47	30
14"	124	118	111	105	98	91	77	63
16"	145	140	134	128	122	116	104	92
20"	184	180	175	171	166	161	152	142
24"	220	217	213	209	205	202	194	186

Lbr

TEES

Minimum length of pipe restrained (feet)(Lbr)

LARGE SIZE

REDUCTION SIZE	6"	8"	10"	12"	14"	16"	20"	24"
6"		49/37	108/66	181/92	266/115	365/137	599/178	883/215
8"			45/36	101/67	166/94	241/119	419/163	637/203
10"				44/37	96/68	156/97	299/146	472/189
12"					43/37	93/69	212/124	356/171
14"						42/37	143/99	266/150
16"							88/70	195/126
20"								84/69
24"								

Ls/L_1

REDUCERS

Minimum length of pipe restrained (L_1)(feet)

Ls : If a specified length of pipe, Ls (feet) on the small side of the reducer is free of bends, valves, tees, or other fittings, restraints are not necessary for the reducer; otherwise the larger side of the reducer shall be restrained the minimum length (L_1)(feet).

PIPE RESTRAINT TABLES

CITY OF BOWLING GREEN
PUBLIC WORKS DEPARTMENT
ENGINEERING DIVISION

STD DWG 6
SH 2 OF 3
REV 03/2019

WATERLINE THRUST BLOCK DETAILS

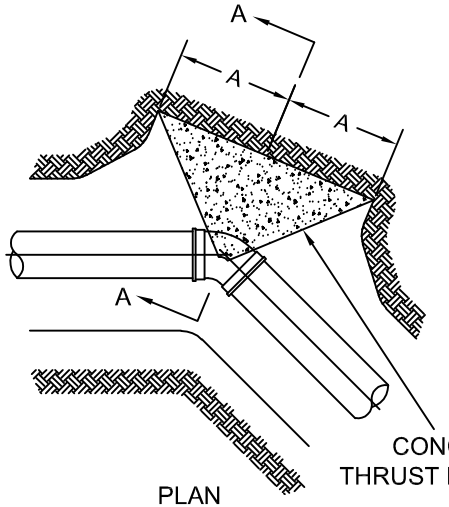

PLAN

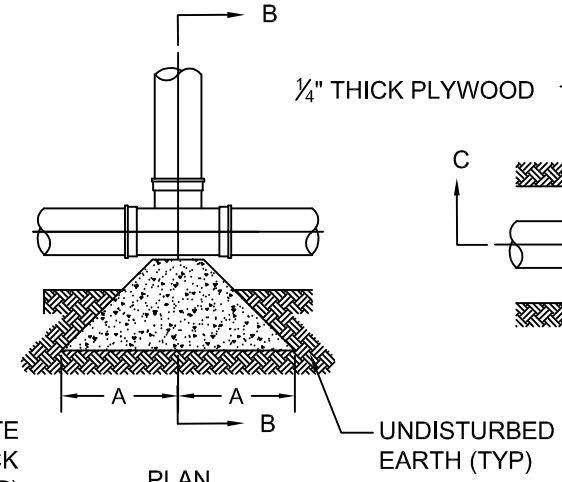

PLAN

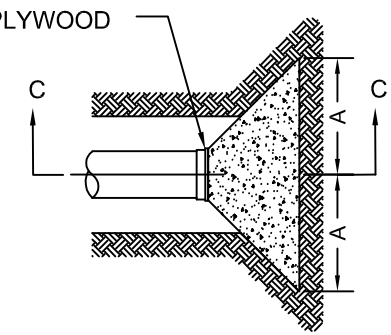

PLAN

NOTES

1. THE DESIGN BASIS FOR THE THRUST BLOCKS IS 150 PSI TEST PRESSURE PLUS AWWA WATER HAMMER

2. ALL BEARING SURFACES SHALL BE CARRIED TO UNDISTURBED EARTH. IN THE EVENT THIS IS NOT PRACTICAL, THE FILL BETWEEN THE BEARING SURFACE AND THE UNDISTURBED EARTH SHALL BE COMPACTED TO 90% STANDARD PROCTOR DENSITY.

3. C = 24" MINIMUM FOR WATERLINES 12" AND LARGER.
   C = 18" MINIMUM FOR WATERLINES 10" AND SMALLER.

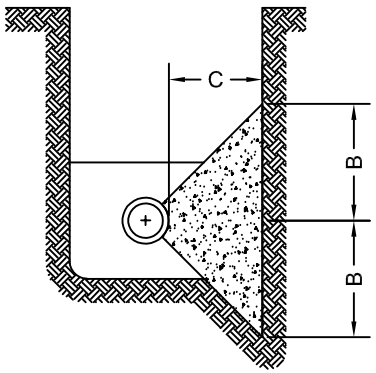

SECTION A-A
BENDS

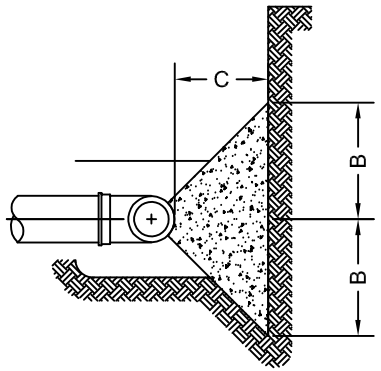

SECTION B-B
TEES

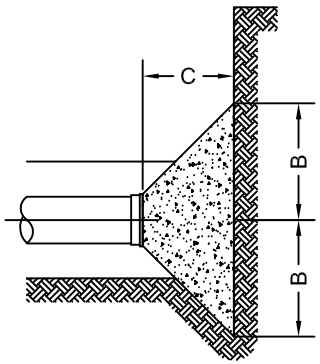

SECTION C-C
PLUG/DEAD END

THRUST BLOCK DIMENSIONS										
SOIL BEARING PRESSURE = 2000 PSF										
WATERLINE SIZE	90 DEGREE BEND		45 DEGREE BEND		22.5 DEGREE BEND		TEES		PLUG/DEAD END	
(IN)	A (IN)	B (IN)	A (IN)	B (IN)	A (IN)	B (IN)	A (IN)	B (IN)	A (IN)	B (IN)
6	14	21	10	15	7	11	11	17	13	20
8	18	27	13	20	9	14	15	23	18	27
10	24	34	17	26	12	18	19	29	22	33
12	31	36	20	30	14	21	23	35	32	36
16	49	40	28	40	19	29	47	40	49	40
20	70	44	38	44	24	36	60	44	70	44

THRUST BLOCK DETAILS

CITY OF BOWLING GREEN
PUBLIC WORKS DEPARTMENT
ENGINEERING DIVISION

STD DWG 6
SH 3 OF 3
REV 03/2019

STANDARD HYDRANT ASSEMBLY - TYPE "A"
PARALLEL TO WATER LINE

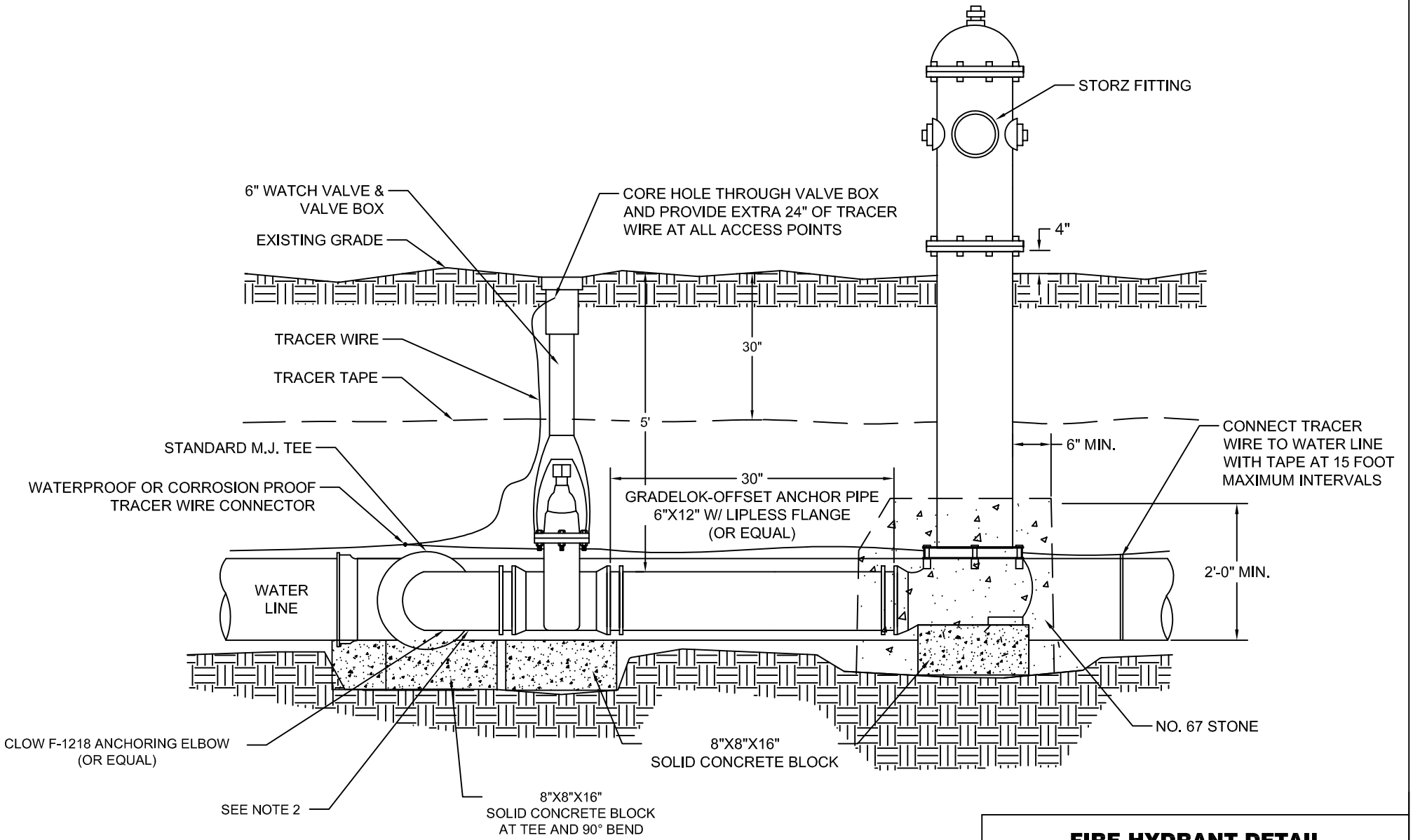

NOTES:

1. HYDRANT DRAINS SHALL NOT BE PLUGGED. A 10 CUBIC FOOT GRAVEL POCKET (NO. 67 STONE) OR DRY WELL SHALL BE PROVIDED UNLESS THE NATURAL SOILS WILL PROVIDE ADEQUATE DRAINAGE IN ACCORDANCE WITH TEN STATES STANDARDS 8.4.4.
2. PROVIDE PIPING AND FITTINGS NECESSARY FOR VERTICAL OR HORIZONTAL OFFSETS BETWEEN THE TEE AND VALVE.
3. HYDRANT EXTENSIONS SHALL NOT BE PERMITTED.

FIRE HYDRANT DETAIL
TYPE A

CITY OF BOWLING GREEN
PUBLIC WORKS DEPARTMENT
ENGINEERING DIVISION

STD DWG 7
SH 1 OF 2
REV 03/2019

STANDARD HYDRANT ASSEMBLY - TYPE "B"
PERPENDICULAR TO WATER LINE

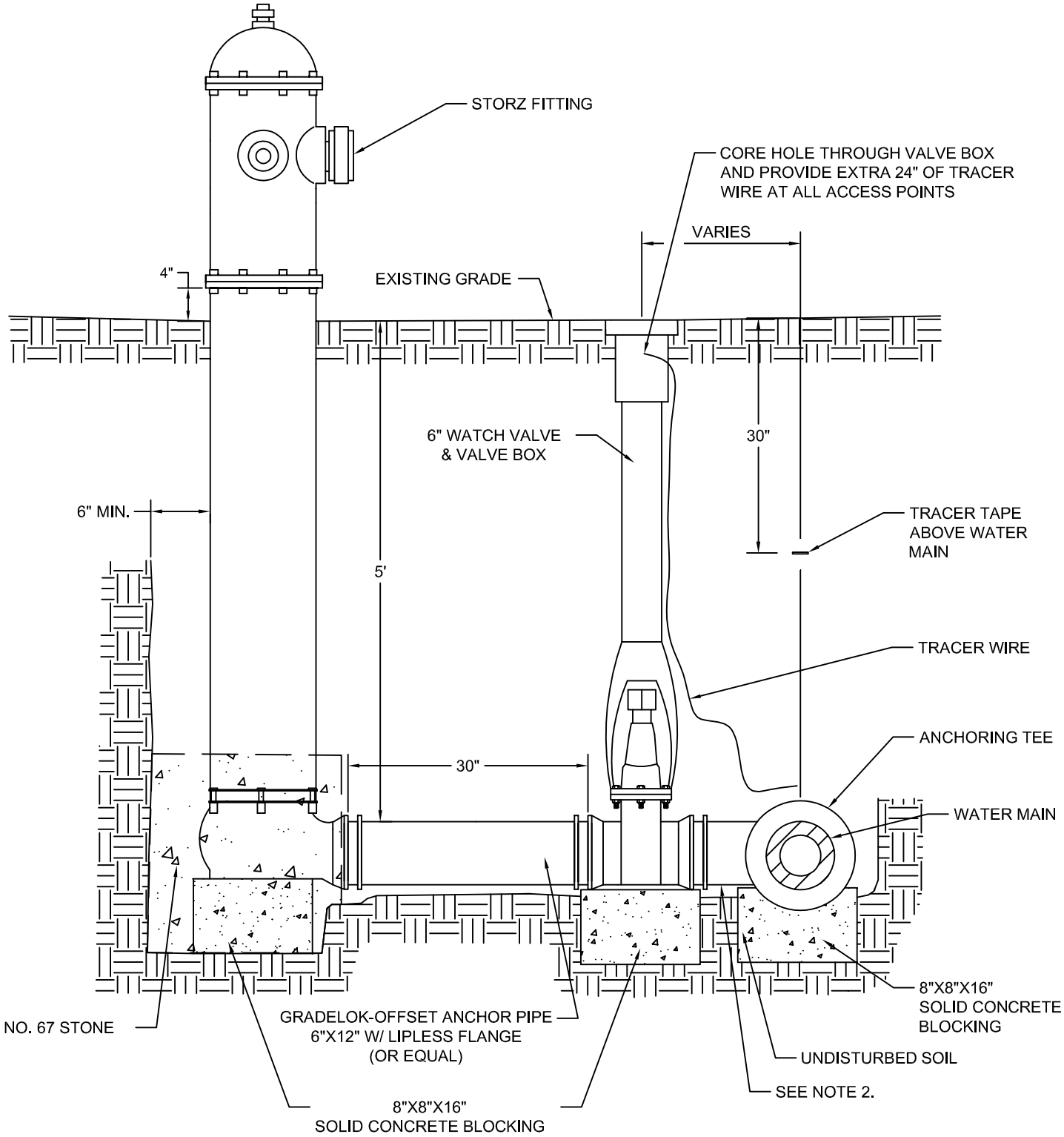

NOTES:

1. HYDRANT DRAINS SHALL NOT BE PLUGGED. A 10 CUBIC FOOT GRAVEL POCKET (NO. 67 STONE) OR DRY WELL SHALL BE PROVIDED UNLESS THE NATURAL SOILS WILL PROVIDE ADEQUATE DRAINAGE IN ACCORDANCE WITH TEN STATE STANDARDS 8.4.4.
2. PROVIDE PIPING AND FITTINGS NECESSARY FOR VERTICAL AND HORIZONTAL OFFSETS BETWEEN THE TEE AND VALVE.
3. HYDRANT EXTENSIONS SHALL NOT BE PERMITTED.

FIRE HYDRANT DETAIL
TYPE B

CITY OF BOWLING GREEN
PUBLIC WORKS DEPARTMENT
ENGINEERING DIVISION

STD DWG 7
SH 2 OF 2
REV 03/2019

TYPICAL HYDRANT CATHODIC PROTECTION

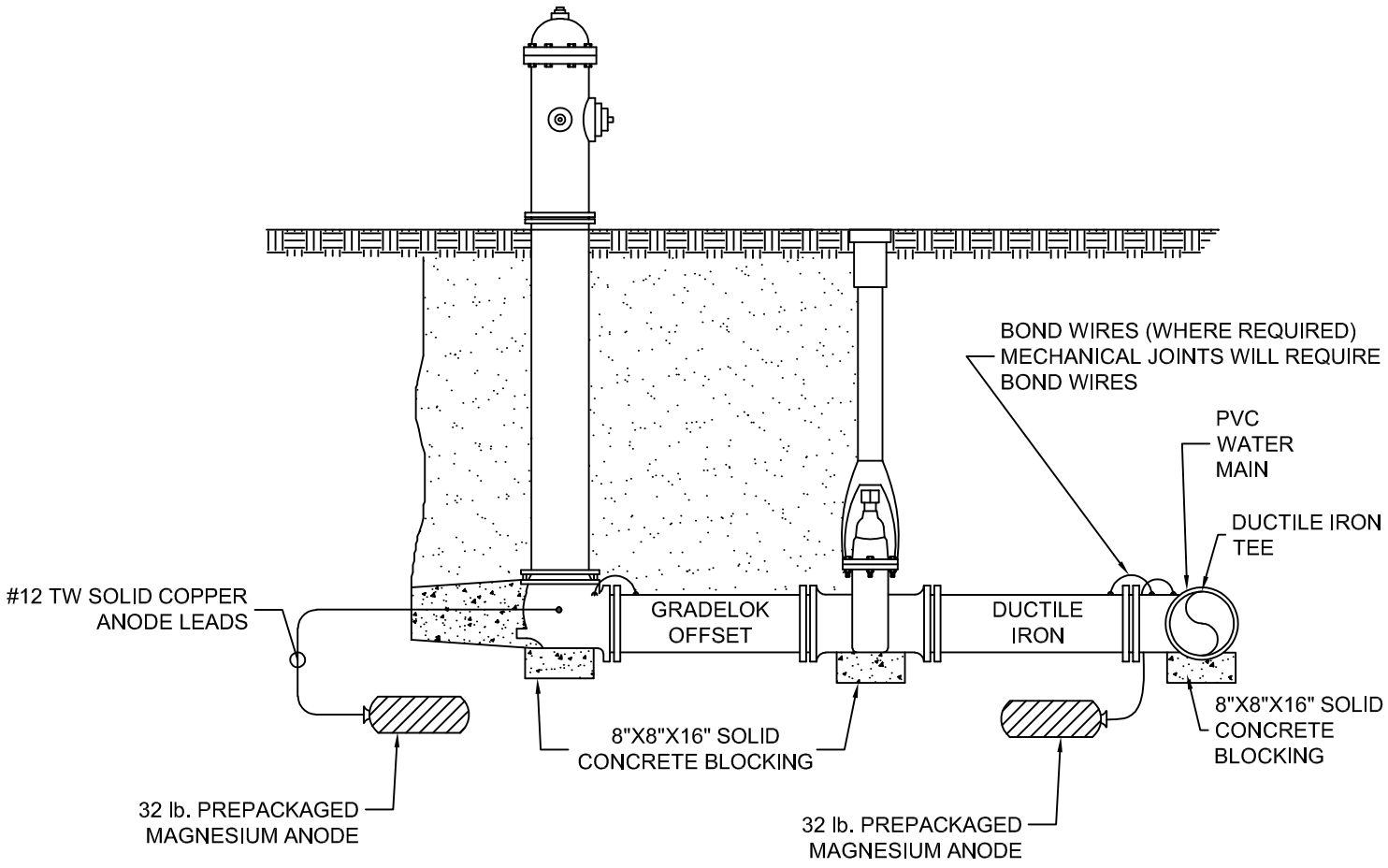

NOTE: CATHODIC PROTECTION IS BASED ON 2 FT. TO 3 FT. LONG ANCHOR PIPES AND PIPE DIAMETER UP TO 12 INCH. FOR LONGER DUCTILE IRON LENGTH OR DIAMETERS OVER 12 INCH - PLEASE CALL FOR QUANTITIES REQUIRED.

FIRE HYDRANT CATHODIC PROTECTION DETAIL	
CITY OF BOWLING GREEN PUBLIC WORKS DEPARTMENT ENGINEERING DIVISION	STD DWG 8 SH 1 OF 3 REV 03/2019

TYPICAL BEND & TEE CATHODIC PROTECTION

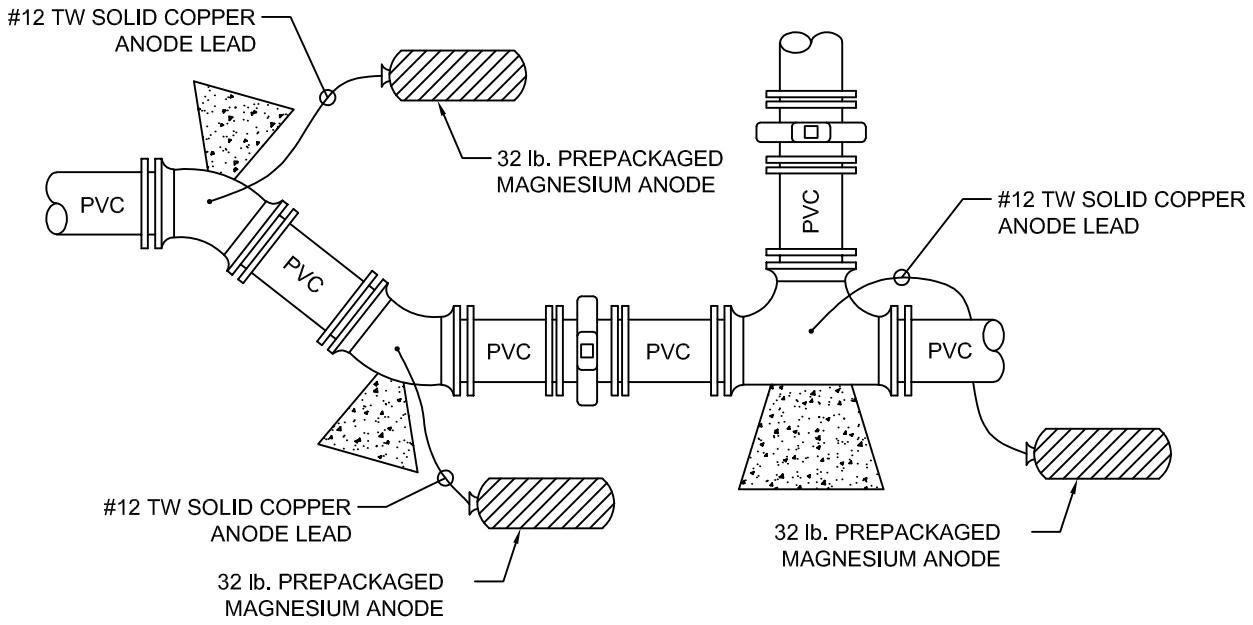

TYPICAL PIPE TEE AND BENDS

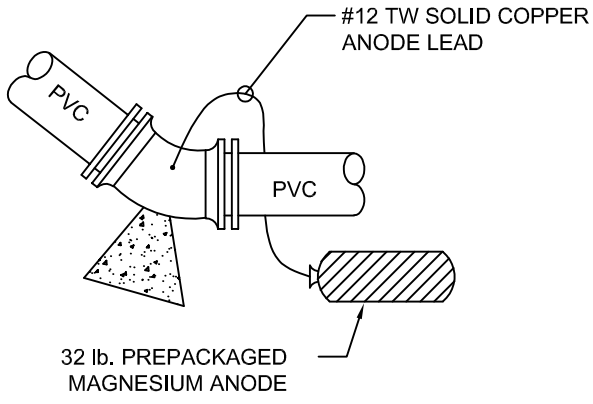

TYPICAL PIPE BEND

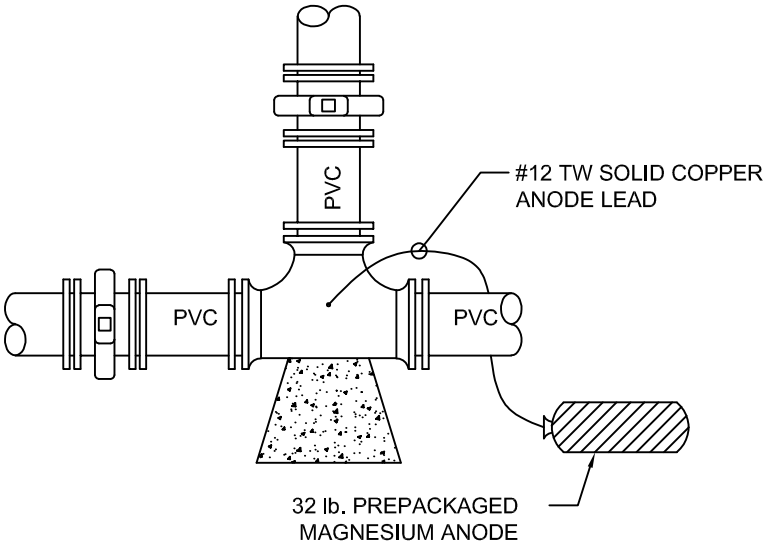

TYPICAL PIPE TEE

NOTES:
1. CATHODIC PROTECTION NOT REQUIRED FOR VALVES
2. ONE ANODE BAG REQUIRED PER FITTING

CATHODIC PROTECTION DETAIL FOR FITTINGS	
CITY OF BOWLING GREEN PUBLIC WORKS DEPARTMENT ENGINEERING DIVISION	STD DWG 8 SH 2 OF 3 REV 03/2019

TYPICAL METER PIT DETAIL

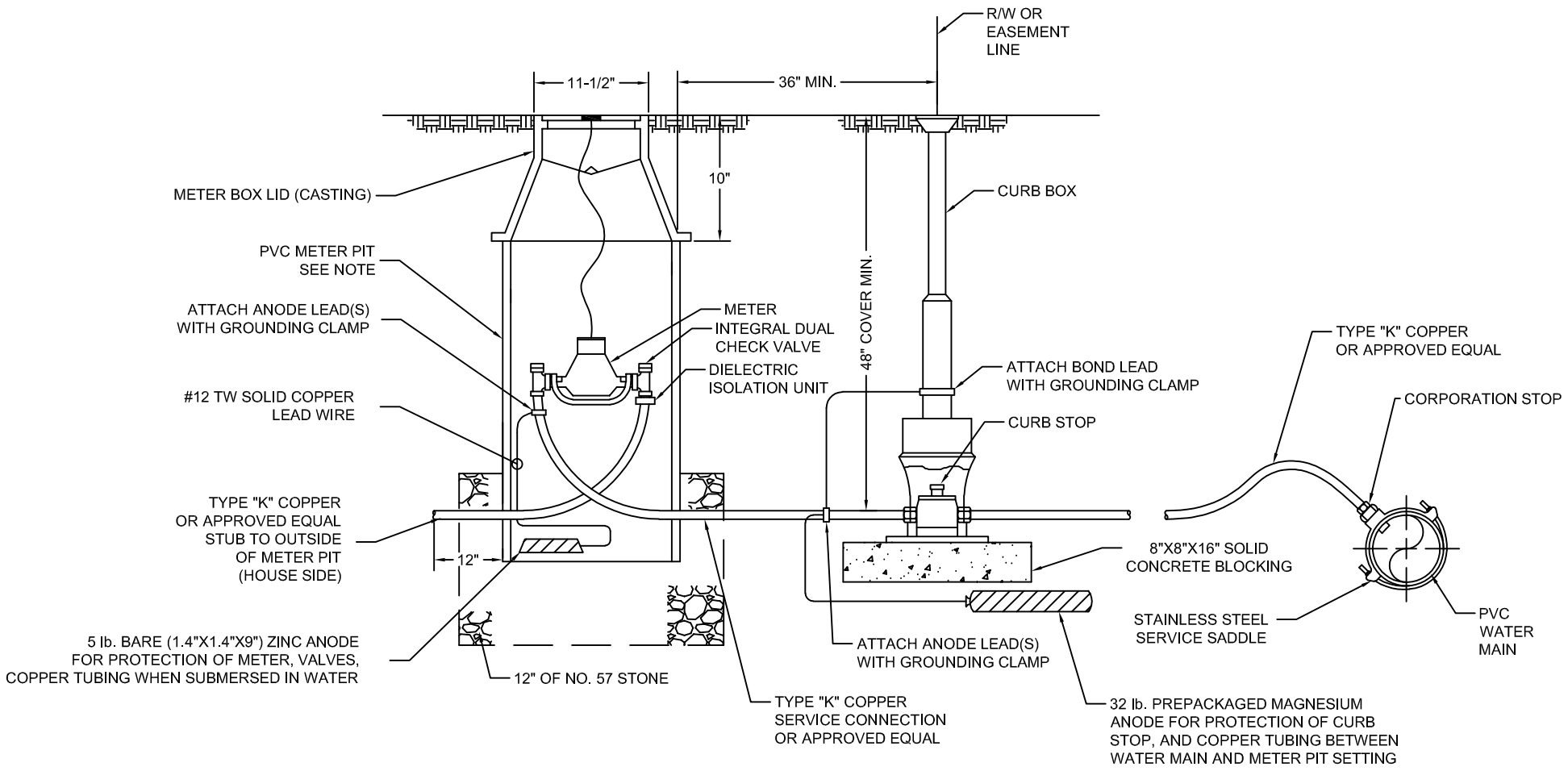

NOTE: CONTACT CITY OF BOWLING GREEN WATER DEPARTMENT FOR METER PIT SPECIFICATIONS.

METER PIT DETAIL WITH CATHODIC PROTECTION	
CITY OF BOWLING GREEN PUBLIC WORKS DEPARTMENT ENGINEERING DIVISION	STD DWG 8
	SH 3 OF 3
	REV 03/2019

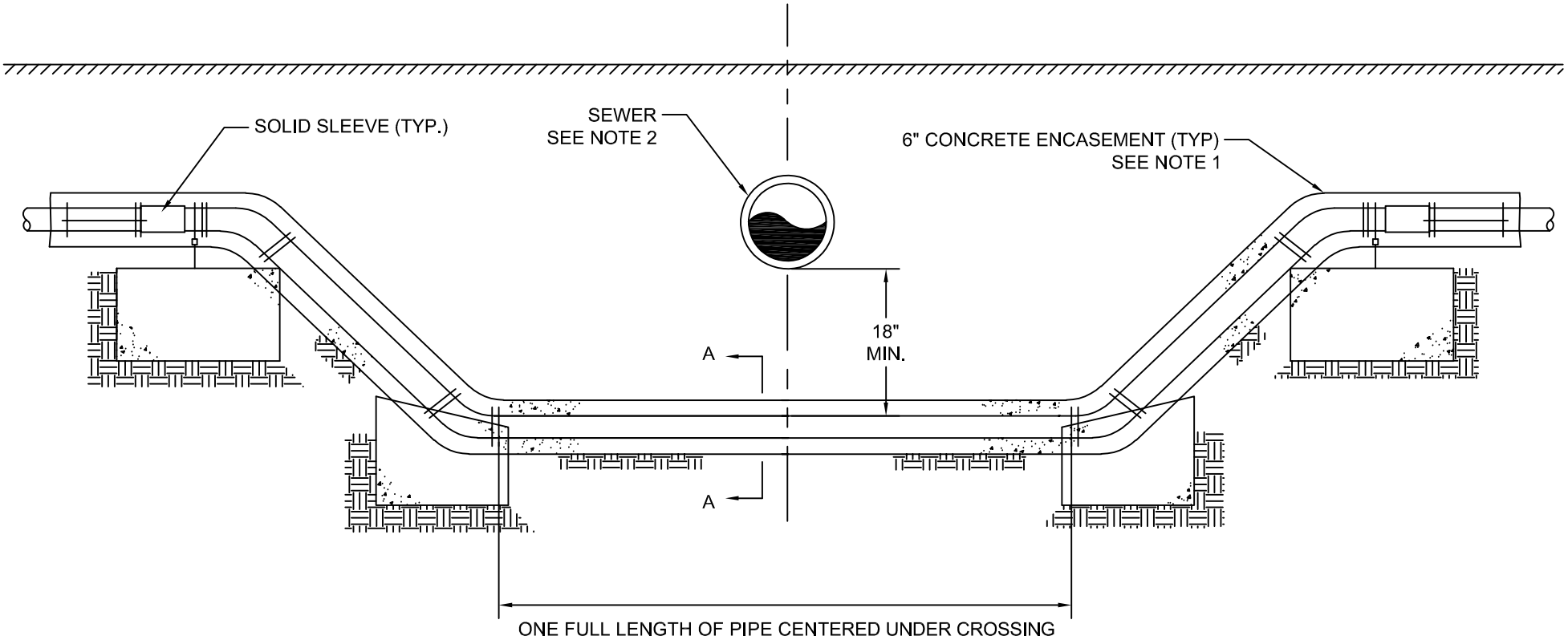

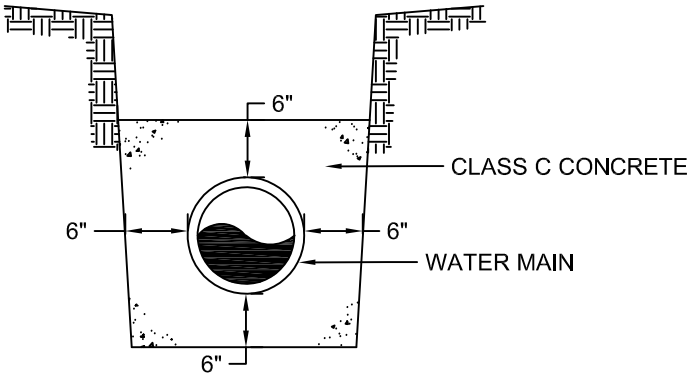

SECTION A-A

NOTES:

1. CONCRETE ENCASEMENT DETAILS SHALL APPLY WHERE A WATERLINE CROSSES AN EXISTING OR PROPOSED SEWER WITH LESS THAN 18" VERTICAL OR 10" HORIZONTAL SEPARATION. NO CONCRETE ENCASEMENT SHALL BE REQUIRED WHEN 18" OR MORE VERTICAL OR 10' HORIZONTAL SEPARATION IS PROVIDED BETWEEN THE WATERLINE AND SEWER.
2. SEWER MAY BE CONSTRUCTED TO WATERLINE PIPE STANDARDS AS AN ALTERNATE TO CONCRETE ENCASEMENT OF WATER MAIN.

WATERLINE LOWERING AND ENCASEMENT DETAIL

CITY OF BOWLING GREEN
PUBLIC WORKS DEPARTMENT
ENGINEERING DIVISION

STD DWG 9
SH 1 OF 1
REV 03/2019

NOTES:

1. CONCRETE TO HAVE A MINIMUM 28-DAY COMPRESSIVE STRENGTH 4000 PSI.
2. PIPE PENETRATIONS SHALL BE AS SHOWN ON PLAN AND PROFILE DRAWINGS.
3. PROVIDE BUTTERFLY VALVES IN ACCORDANCE WITH AWWA C504 MANUFACTURED BY MUELLER CO. (LINESEAL III) OR APPROVED EQUAL.
4. IF VERTICAL DISTANCE FROM OPERATING NUT TO TOP OF CASTING EXCEEDS 7-FEET, PROVIDE VALVE STEM EXTENSION AND STEM GUIDES.
5. BUTTERFLY VALVE DETAIL IS FOR WATERLINES 16" AND LARGER.

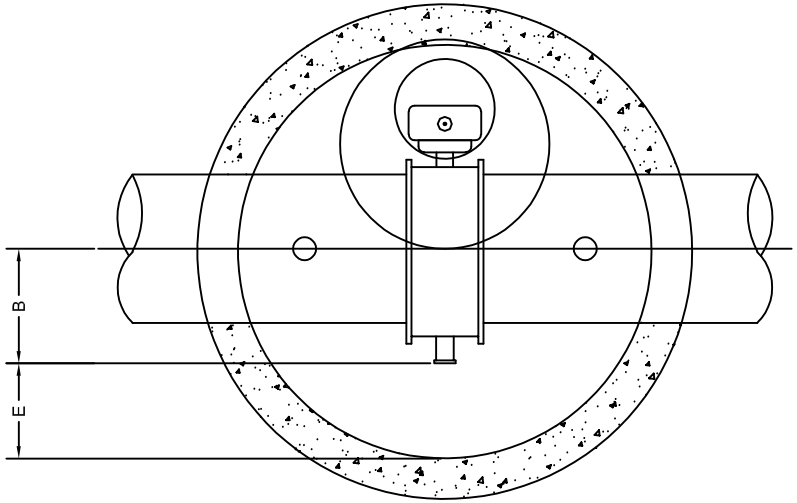

CIRCULAR STRUCTURE PLAN

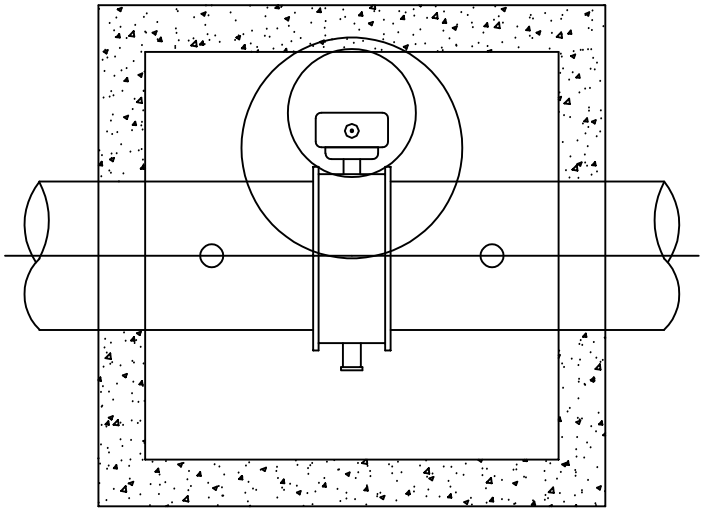

SQUARE STRUCTURE PLAN

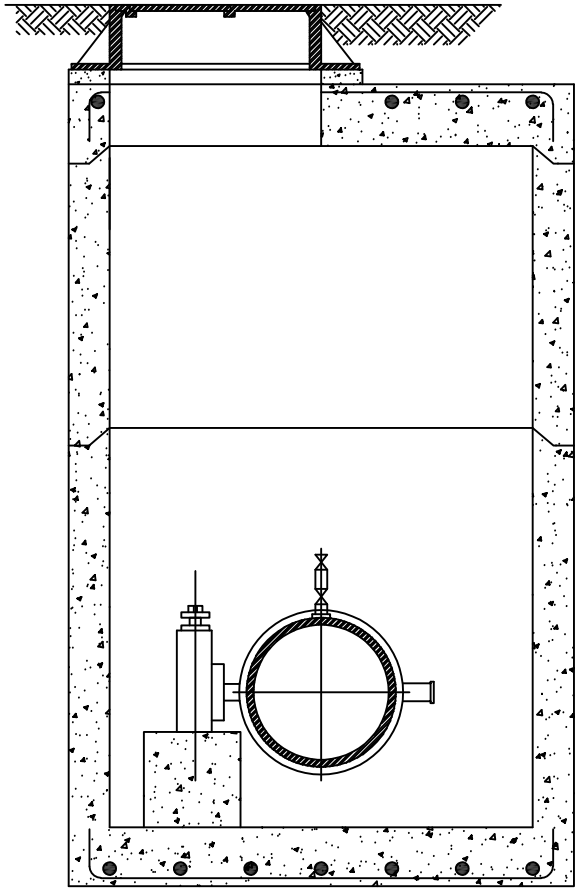

SECTION A-A

LINE SIZE (IN.)	MH SIZE (IN.)	MH SHAPE	MH WALL THICKNESS (IN.)	A (IN.)	B (IN.)	C (IN.)	D (IN.)	E (IN.)	F (IN.)	G (IN.)
16	60	CIRCULAR	6	16	14.5	6	8	15.5	12.5	14
20	72	SQUARE	8	19	17	7	10	19	10.5	17
24	72	SQUARE	8	22.5	18.5	8	5.5	17.5	10.5	13.5
30	78	SQUARE	8	25.5	24.5	8	5.5	14.5	10.5	13.5
36	90	SQUARE	8	29.5	28	9	6.5	17	10.5	13.5

BUTTERFLY VALVE DETAIL

CITY OF BOWLING GREEN
PUBLIC WORKS DEPARTMENT
ENGINEERING DIVISION

STD DWG 10
SH 1 OF 3
REV 03/2019

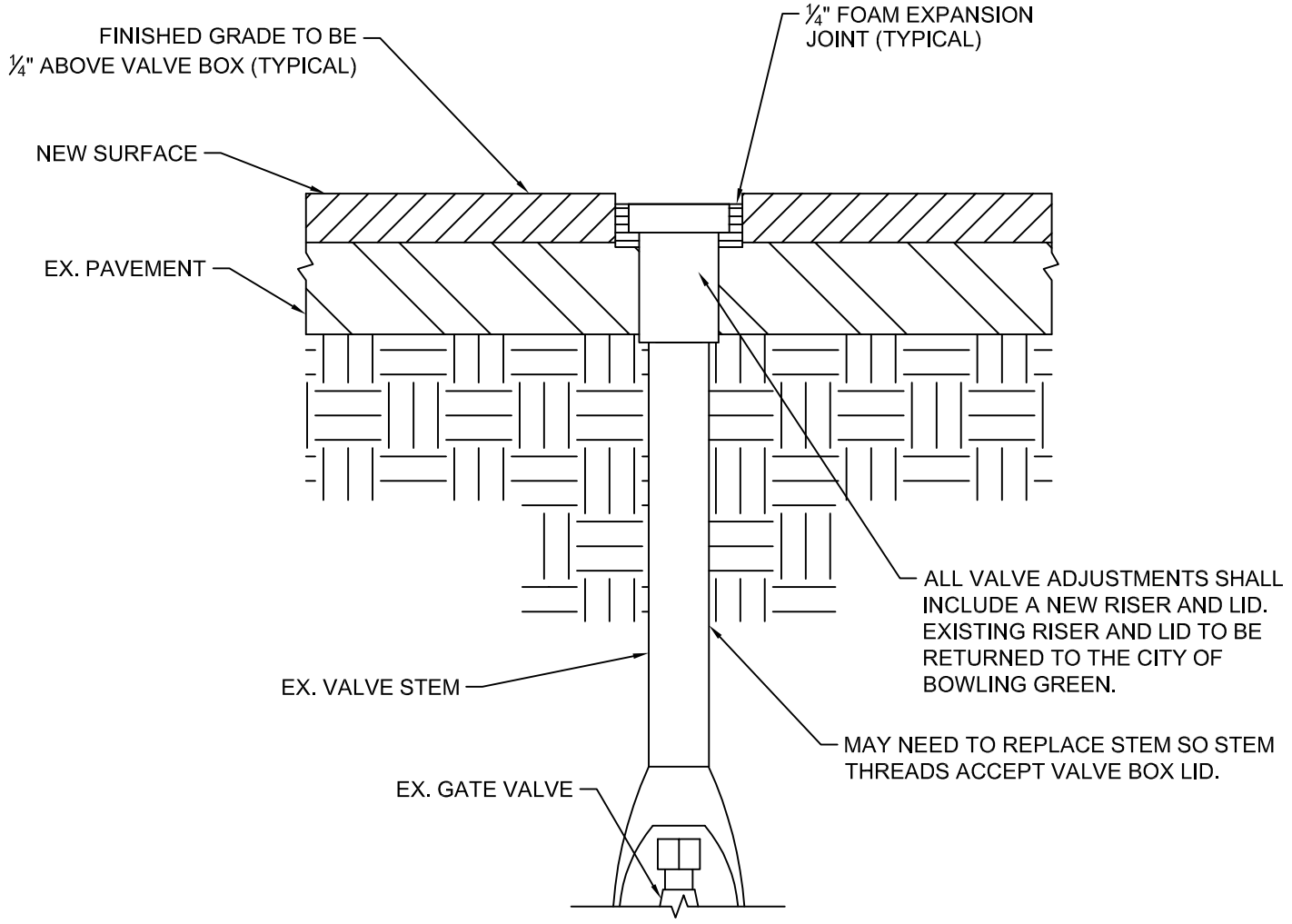

ASSURE VALVE STEM IS STRAIGHT AND UNBROKEN
PRIOR TO ADJUSTING TO GRADE.

VALVE ADJUSTMENT IN PAVEMENT	
CITY OF BOWLING GREEN PUBLIC WORKS DEPARTMENT ENGINEERING DIVISION	STD DWG 10 SH 2 OF 3 REV 03/2019

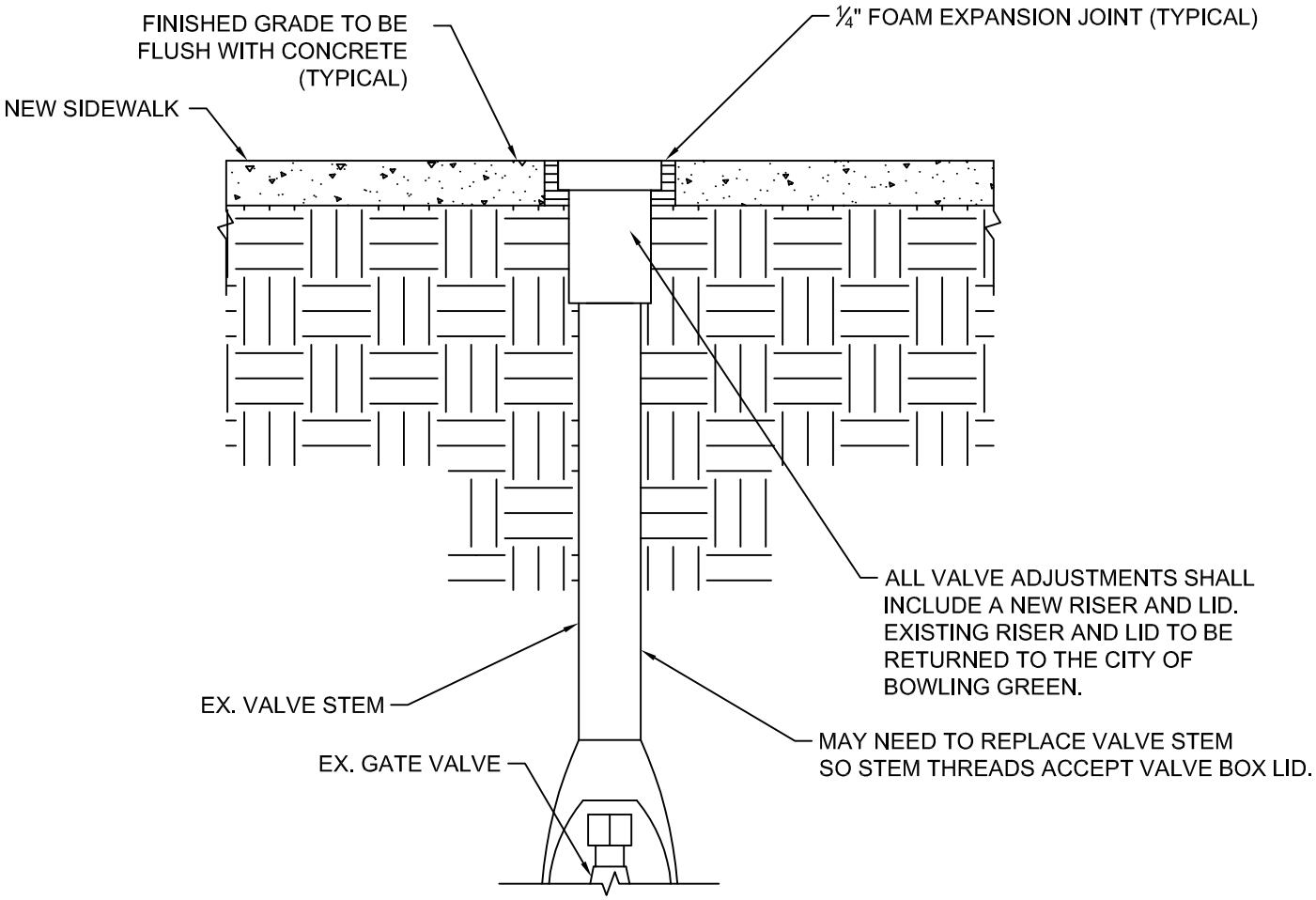

ASSURE VALVE STEM IS STRAIGHT AND UNBROKEN PRIOR TO ADJUSTING TO GRADE.

VALVE ADJUSTMENT IN SIDEWALK OR DRIVE	
CITY OF BOWLING GREEN PUBLIC WORKS DEPARTMENT ENGINEERING DIVISION	STD DWG 10 SH 3 OF 3 REV 03/2019

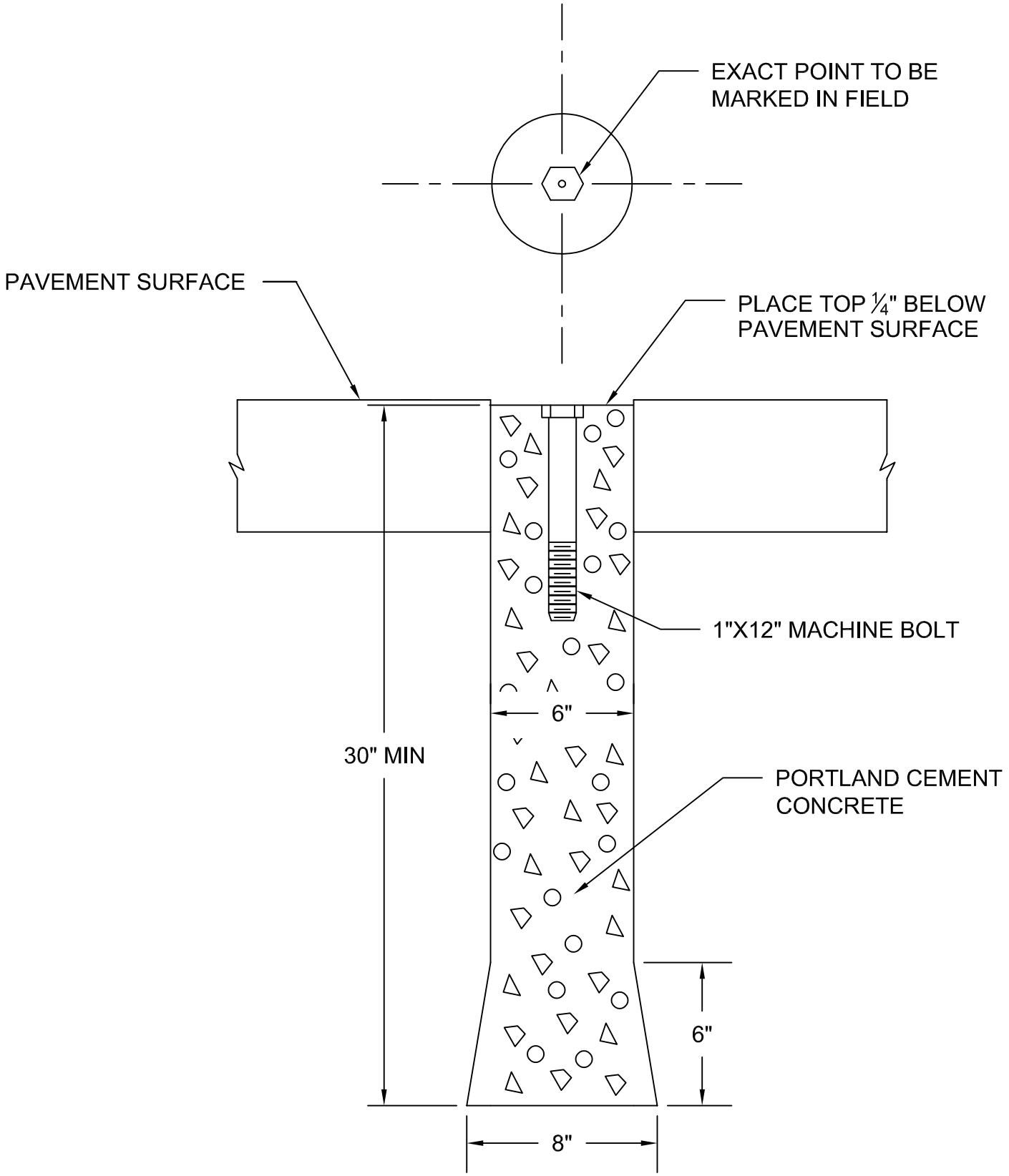

STANDARD MONUMENT DETAIL

CITY OF BOWLING GREEN PUBLIC WORKS DEPARTMENT ENGINEERING DIVISION	STD DWG 11 SH 1 OF 1 REV 03/2019

CONCRETE DRIVE APPROACH

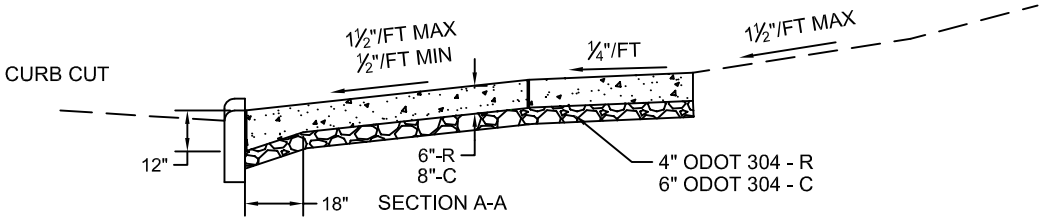

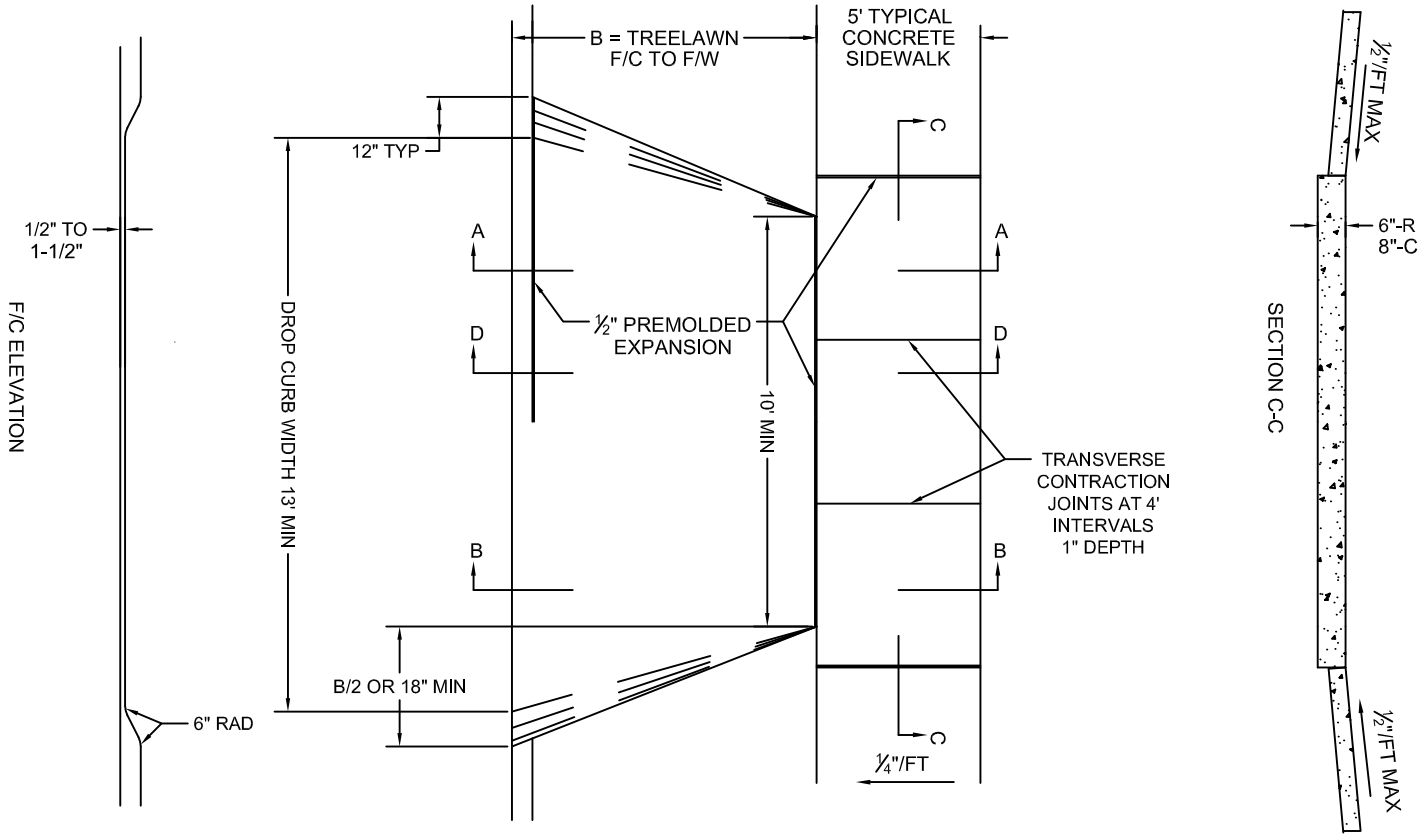

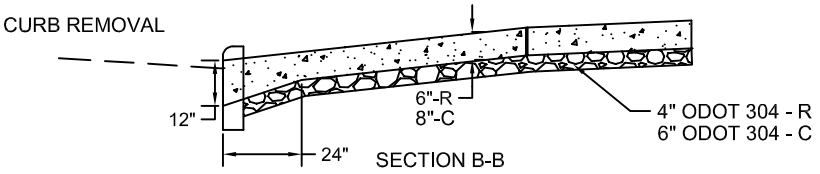

R = RESIDENTIAL
C = COMMERCIAL

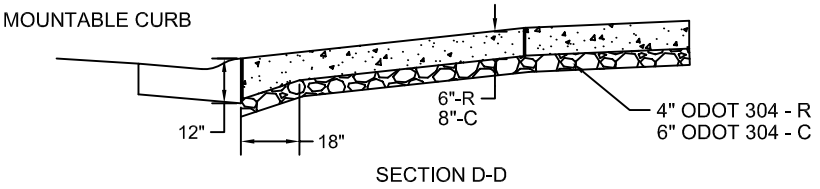

CONCRETE SHALL MEET THE MATERIAL SPECIFICATIONS OF ODOT ITEM 452, NON-REINFORCED PORTLAND CEMENT CONCRETE PAVEMENT.

STANDARD SURFACE TEXTURE BROOMED TRANSVERSE TO APPROACH SLOPE. SWIRL FINISH UPON REQUEST AND APPROVAL BY DIRECTOR OF PUBLIC WORKS OR HIS REPRESENTATIVE.

CONCRETE DRIVE APPROACH DETAIL

CITY OF BOWLING GREEN
PUBLIC WORKS DEPARTMENT
ENGINEERING DIVISION

STD DWG 12
SH 1 OF 2
REV 03/2019

ASPHALT DRIVE APPROACH

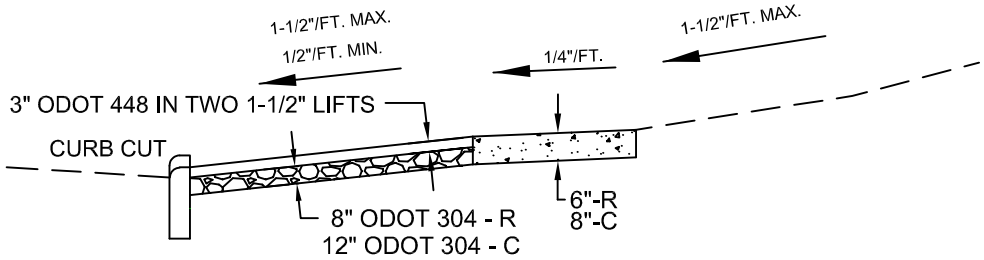

SECTION A-A

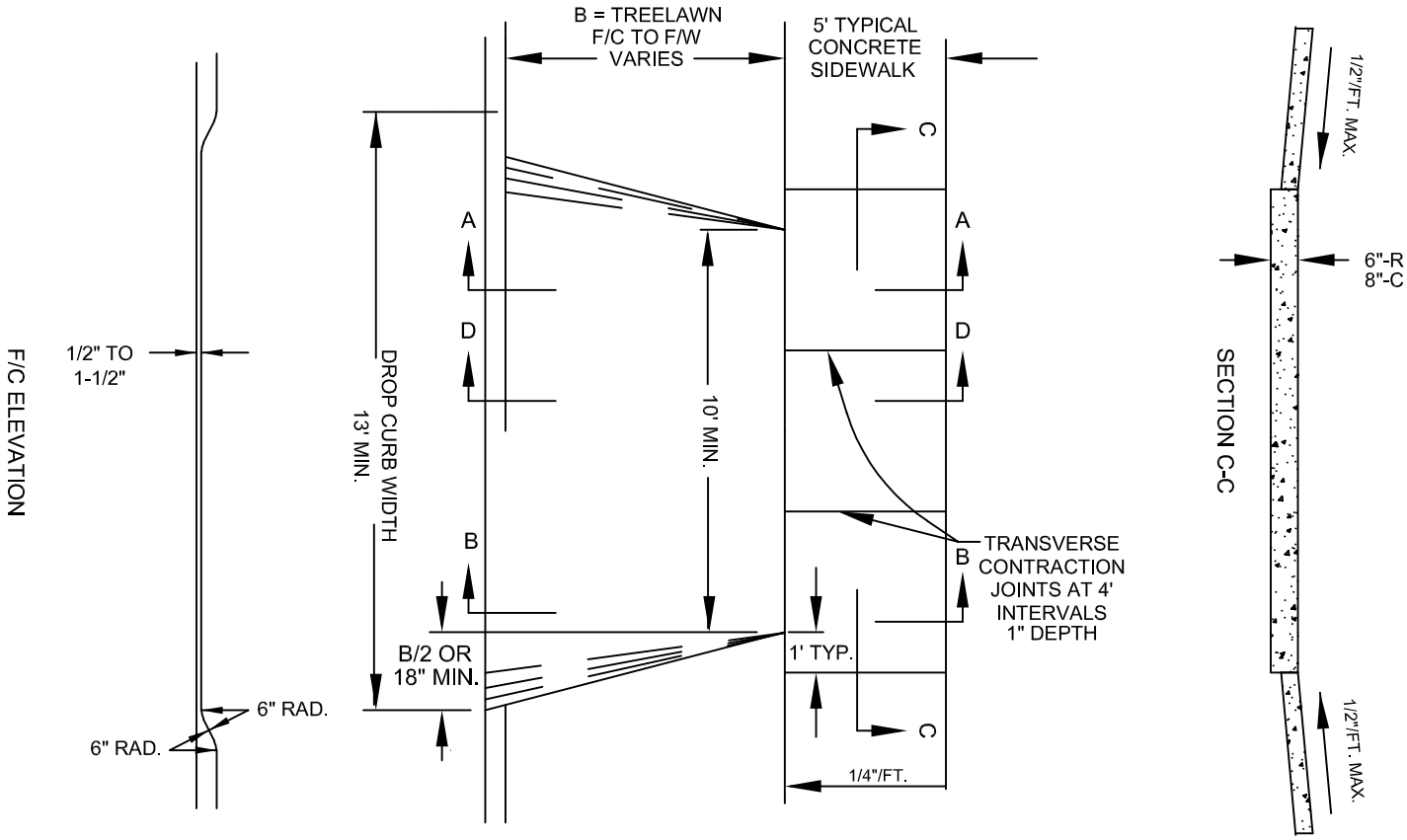

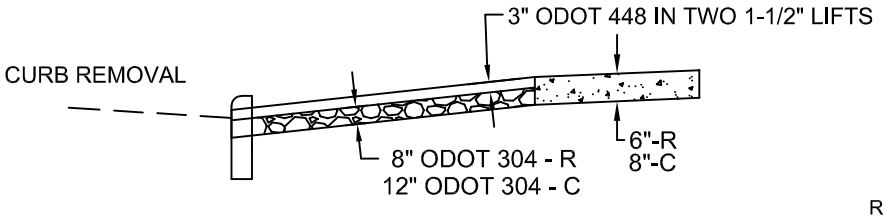

SECTION B-B

R = RESIDENTIAL
C = COMMERCIAL

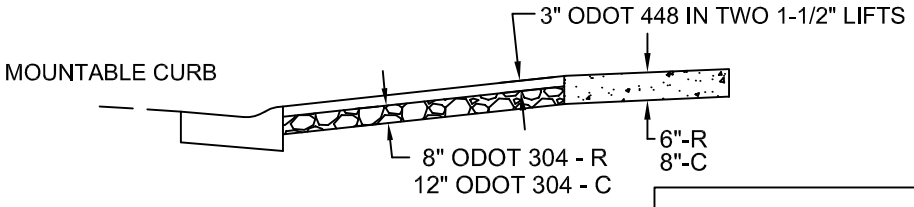

SECTION D-D

ASPHALT DRIVE APPROACH DETAIL

CITY OF BOWLING GREEN
PUBLIC WORKS DEPARTMENT
ENGINEERING DIVISION

STD DWG 12
SH 2 OF 2
REV 03/2019

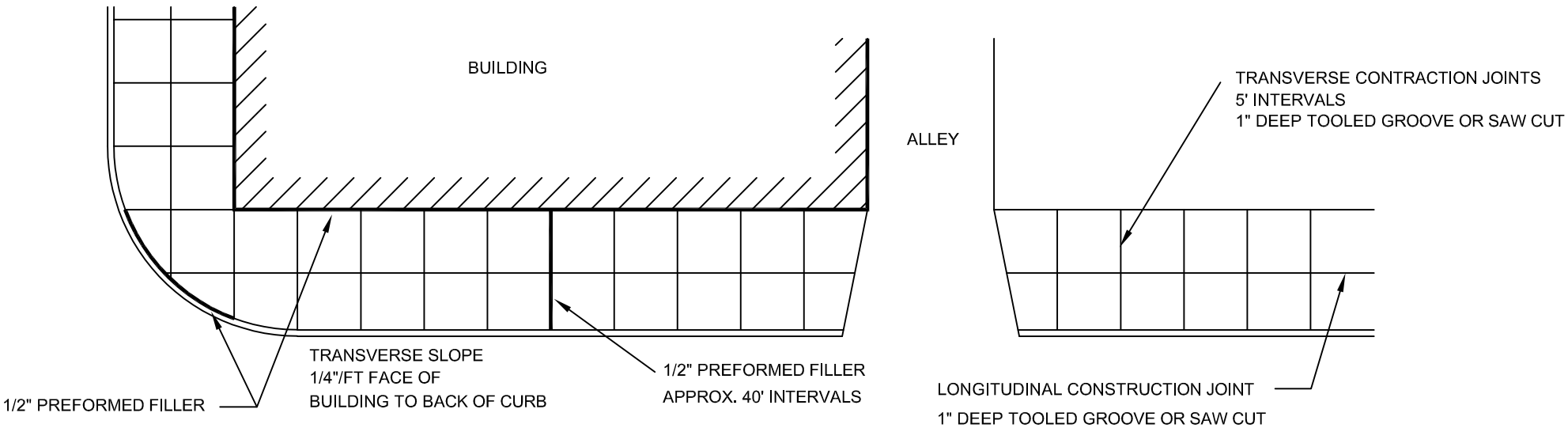

TYPICAL BUSINESS DISTRICT SIDEWALK

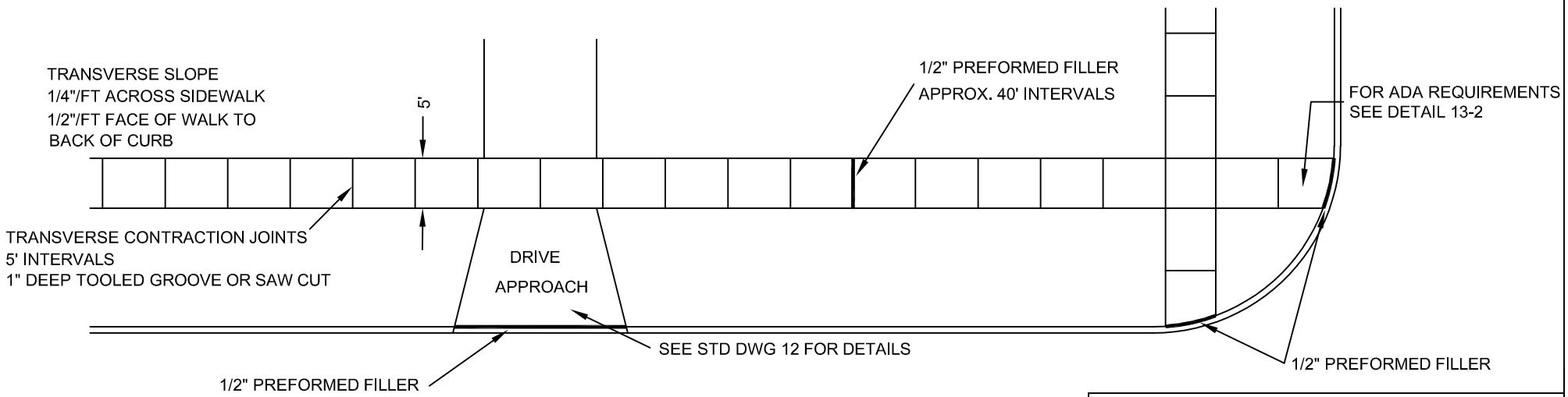

TYPICAL RESIDENTIAL SIDEWALK

4" CONCRETE SIDEWALK SHALL MEET THE MATERIAL SPECIFICATIONS OF ODOT ITEM 608, WALKS

SIDEWALK DETAIL

CITY OF BOWLING GREEN
PUBLIC WORKS DEPARTMENT
ENGINEERING DIVISION

STD DWG 13
SH 1 OF 2
REV 03/2019

CURB RAMP/DETECTABLE WARNING

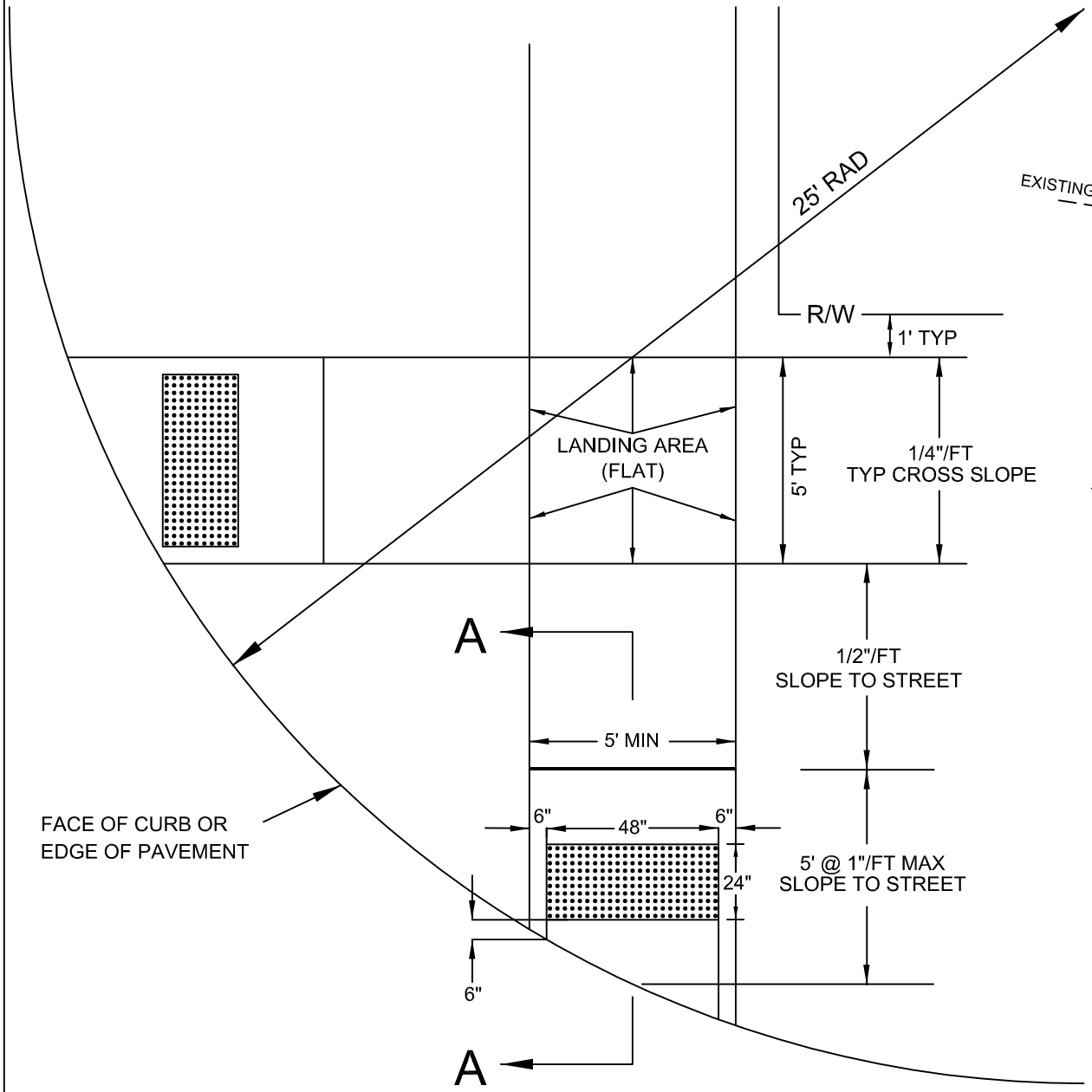

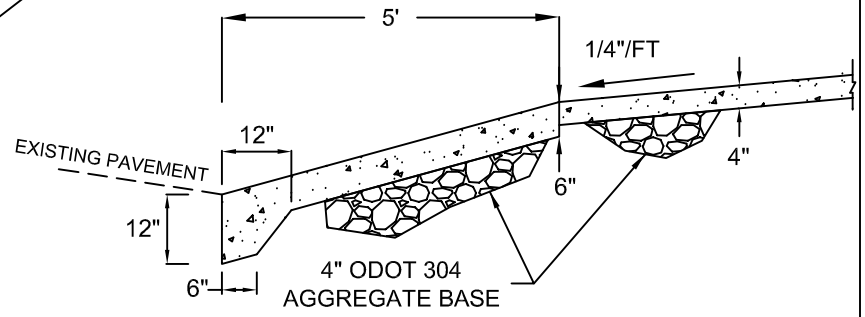

SECTION A-A

NOTES:

1. CURB RAMPS MUST BE INSTALLED AT ALL INTERSECTIONS, ALLEYS AND DRIVES WHERE A CURB COULD PRESENT A BARRIER.
2. ALL CURB RAMPS AND SIDEWALKS SHALL BE FINISHED WITH A TRANSVERSE FINE TO MEDIUM BROOM FINISH.
3. NO SLOPE GREATER THAN 1/2" PER FOOT WILL BE ALLOWED EXCEPT LONGITUDINALLY IN THE RAMP AREA AS SHOWN.
4. SIDEWALK WINGS OR FLARES ARE NOT ALLOWED.
5. THE EDGE OF THE CURB RAMP SHALL BE FLUSH WITH THE ADJACENT EDGE OF PAVEMENT OR GUTTER.
6. DETECTABLE WARNING SURFACE (DWS) SHALL BE INSTALLED ON ALL PEDESTRAIN CROSSINGS OF A ROAD, PRIVATE SIGNALIZED DRIVEWAY OR STRIPED CROSSWALK. DWS MAY BE INSTALLED ON NON-SIGNALIZED DRIVEWAY IF DEEMED WARRANTED BY THE OWNER OR THE CITY. ALSO, DWS SHALL BE INSTALLED ON ANY WALK PARALLELING A PUBLIC STREET NOT SEPERATED BY CURBS, RAILINGS, OR OTHER ELEMENTS BETWEEN THE PEDESTRIAN AREAS AND VEHICULAR TRAFFIC.
7. DWS SHALL BE CAST IN PLACE TILE SYSTEMS AS MANUFACTURED BY ADA SOLUTIONS, ARMOR TILE, OR AN APPROVED EQUAL. THE COLOR SHALL BE BRICK RED OR COLONIAL RED.
8. DWS SHALL MEET ADA ACCESSIBILITY GUIDELINES AND CITY STANDARDS.

CURB RAMP DETAIL

CITY OF BOWLING GREEN
PUBLIC WORKS DEPARTMENT
ENGINEERING DIVISION

STD DWG 13
SH 2 OF 2
REV 03/2019

STANDARD MAILBOX WITH CURB

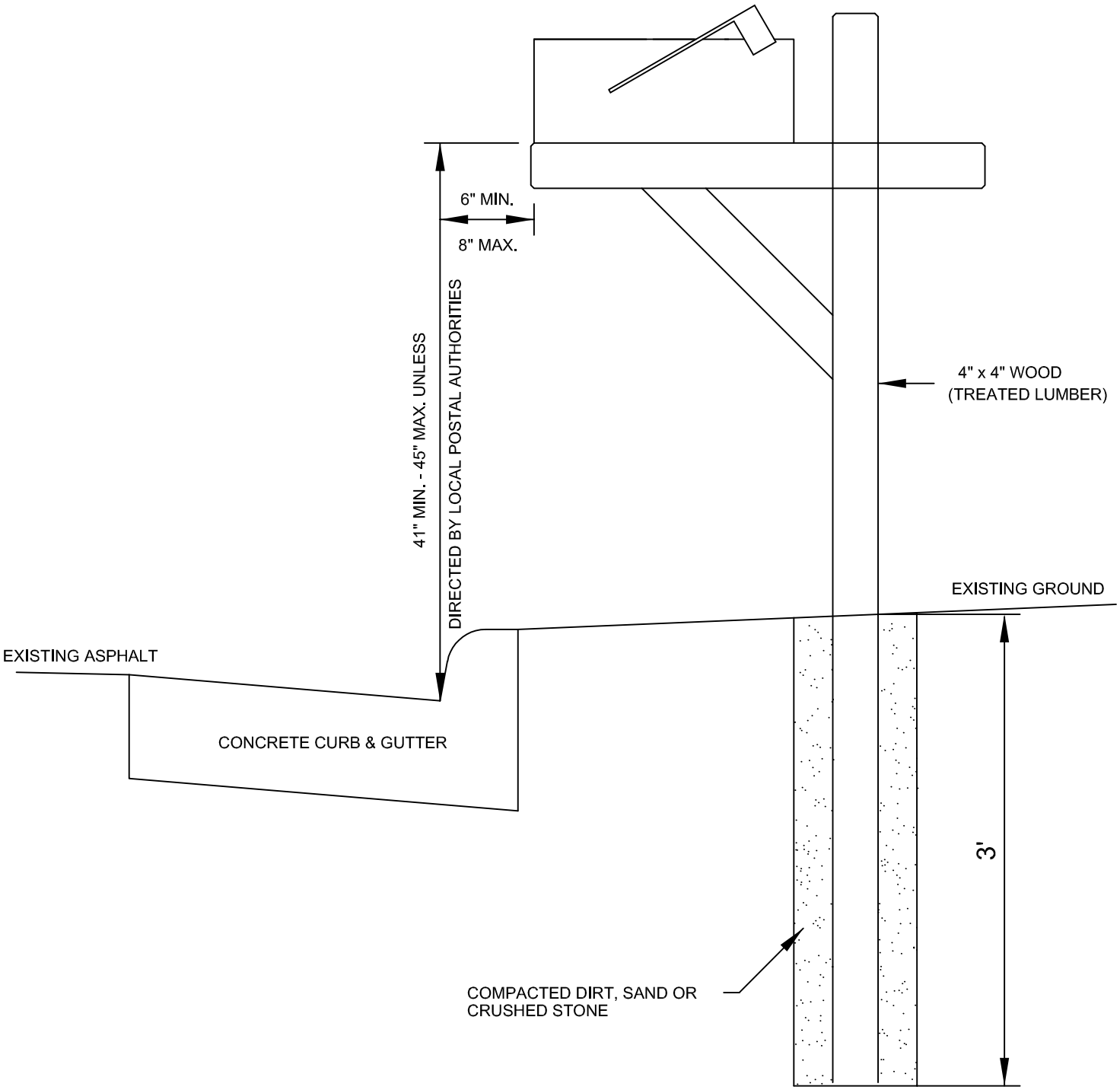

STANDARD MAILBOX WITH CURB	
CITY OF BOWLING GREEN PUBLIC WORKS DEPARTMENT ENGINEERING DIVISION	STD DWG 14 SH 1 OF 3 REV 03/2019

STANDARD MAILBOX WITHOUT CURB

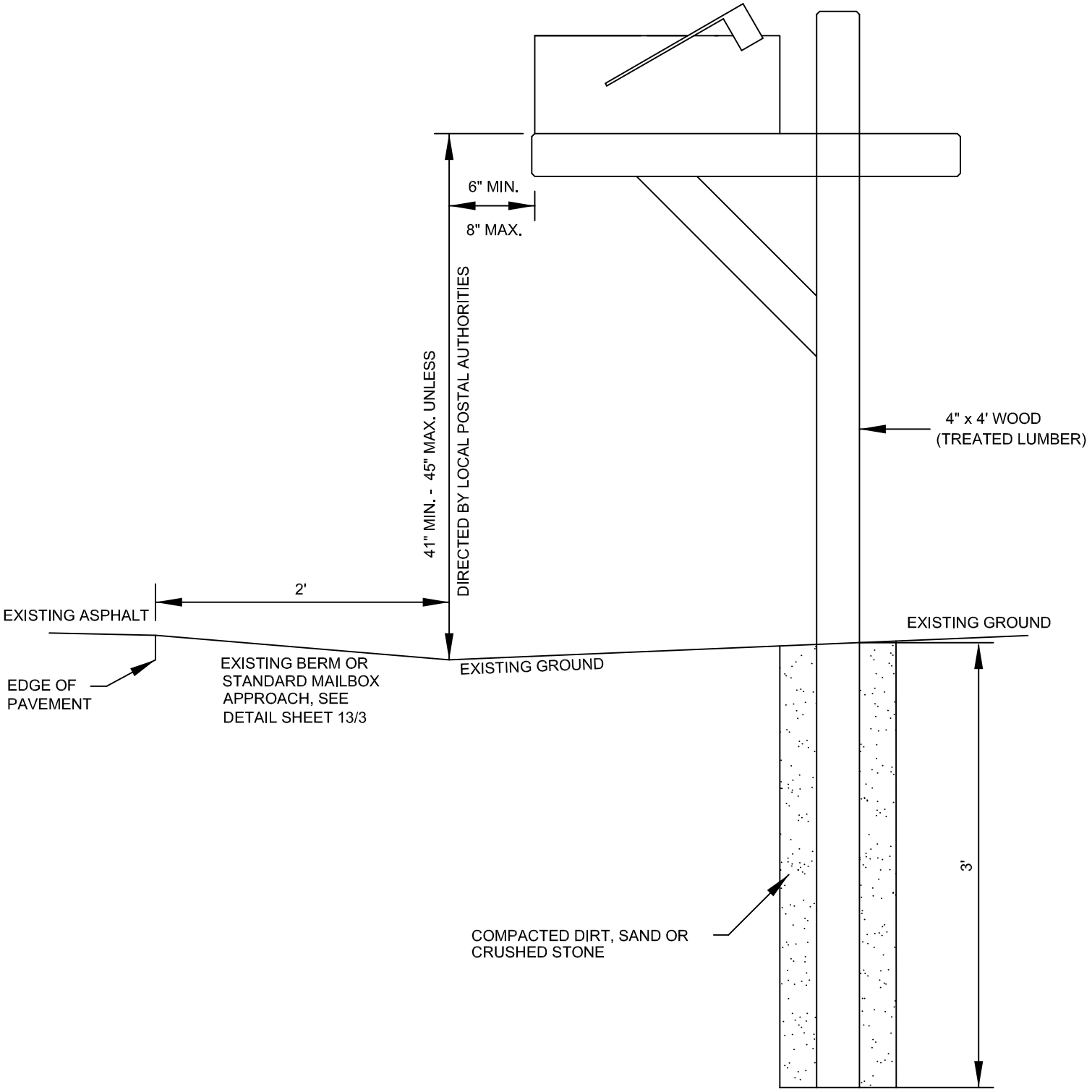

STANDARD MAILBOX WITHOUT CURB	
CITY OF BOWLING GREEN PUBLIC WORKS DEPARTMENT ENGINEERING DIVISION	STD DWG 14 SH 2 OF 3 REV 03/2019

TYPICAL MAILBOX PULL-OFF AREA

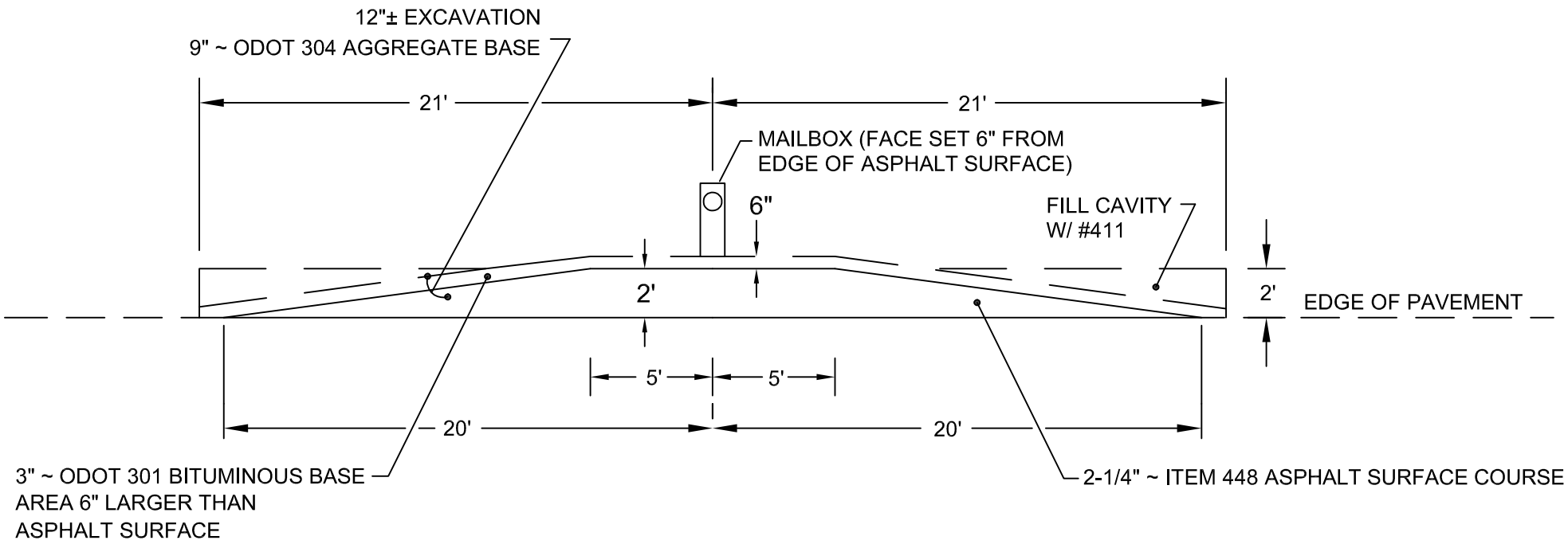

MAILBOX PULL-OFF DETAIL

CITY OF BOWLING GREEN
PUBLIC WORKS DEPARTMENT
ENGINEERING DIVISION

STD DWG 14
SH 3 OF 3
REV 03/2019

LARGE METER LAYOUT IN BUILDING

1½" & 2" SERVICES:

COPPER PIPING THROUGH BACKFLOW DEVICE IS RECOMMENDED.

4" AND GREATER SERVICES:

PIPING SHALL BE D.I.P. CLASS 53 TO RIGID FLANGE, FROM RIGID FLANGE THROUGH METER VALVES & BYPASS TO BE DUCTILE, COPPER OR BRASS.

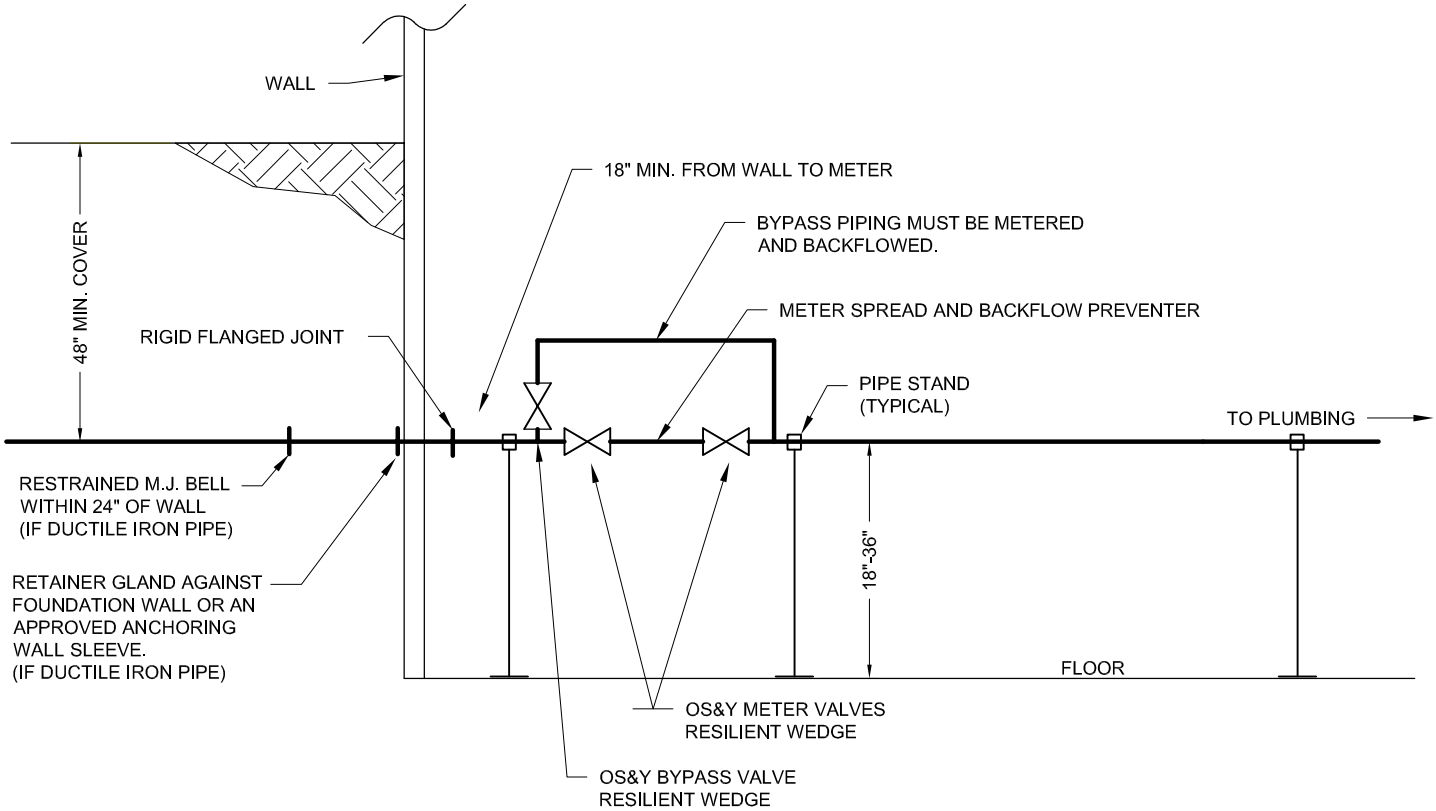

NOTE:

1. FULL PORT BALL VALVES IN LIEU OF OS&Y VALVES MAY BE INSTALLED FOR 1½" & 2" METERS.
2. BYPASS MANDATORY FOR ALL METERS. BYPASS VALVE MUST BE LOCKABLE.
3. DUAL INSTALLATION FOR BACKFLOW PREVENTION DEVICES IS OPTIONAL FOR IRRIGATION SERVICES.
4. ALTERNATE DESIGNS MAY BE SUBMITTED TO WATER ENGINEERING FOR APPROVAL.
5. PROVIDE SPREADER FOR PROPER ALIGNMENT ON INSTALLATION OF METER SPREAD
6. NO FLANGE ADAPTERS BEFORE INITIAL SHUT-OFF VALVE(S).
7. PROVIDE ½" CONDUIT WITH PULL STRING TO OUTSIDE OF BUILDING FOR AMR.
8. FLOOR DRAIN IS REQUIRED IN ROOM WHERE METER AND BACKFLOW DEVICES ARE LOCATED.
9. ALL METERS MUST INCLUDE STRAINERS. (FIVE PIPE DIAMETERS UPSTREAM OF METER)

GENERAL NOTE: CONTACT ENGINEERING FOR ANY SITUATION NOT COVERED IN STANDARDS

DRAWING NOT TO SCALE

LARGE METER LAYOUT IN BUILDING

CITY OF BOWLING GREEN
PUBLIC WORKS DEPARTMENT
ENGINEERING DIVISION

STD DWG 15
SH 1 OF 5
REV 03/2019

COMBINATION FIRE & DOMESTIC METER LAYOUT IN BUILDING

NOTE:

COMBINATION SERVICE ONLY PERMITTED INSIDE BUILDING
IF THERE IS NO LOCATION OUTSIDE OF THE BUILDING FOR
A PIT ON THE CUSTOMER'S PROPERTY

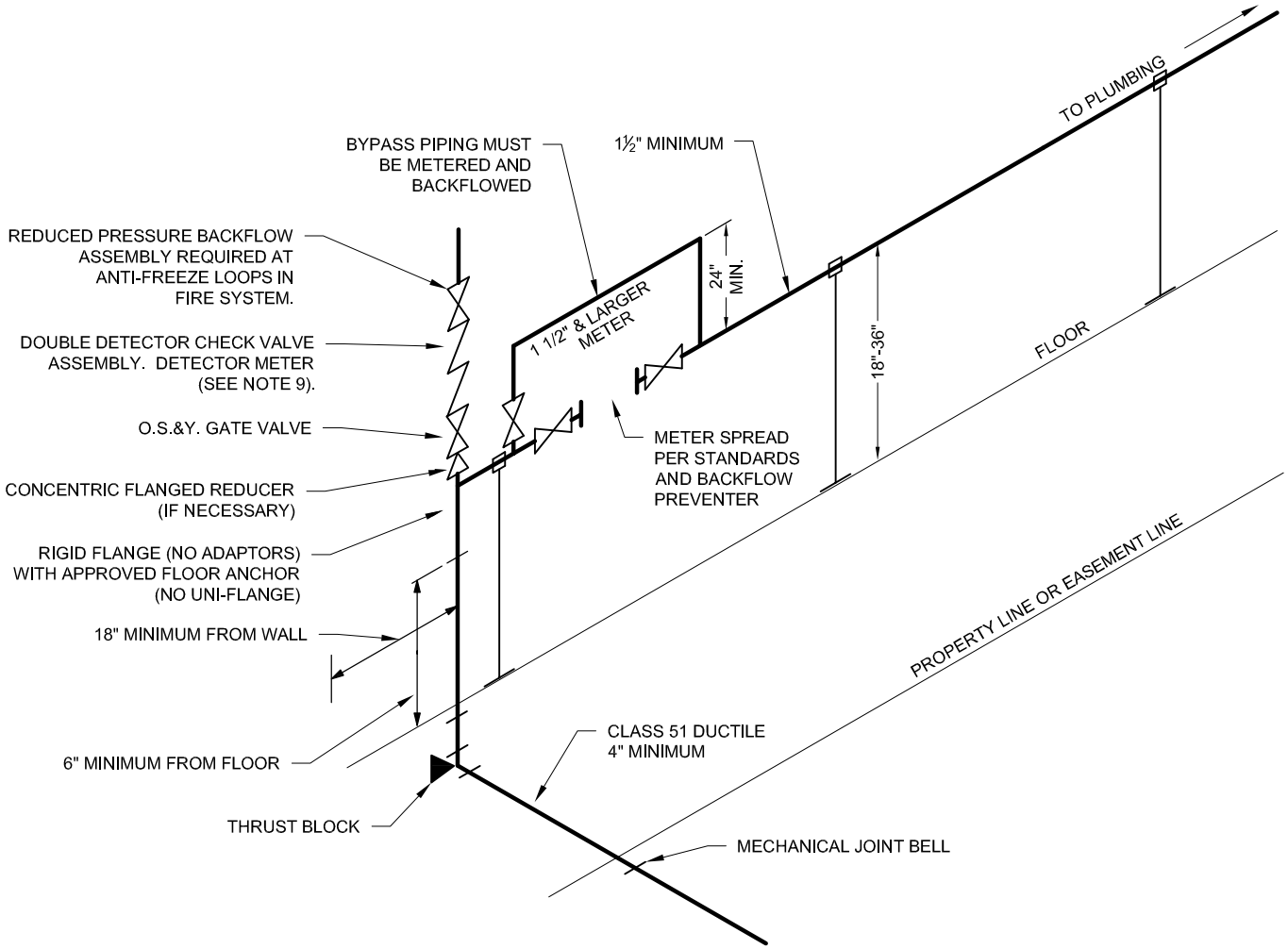

NOTE:

1. ALL UNDERGROUND JOINTS MUST BE RESTRAINED.
2. INSIDE PIPING SHALL BE DUCTILE IRON PIPE CLASS 53 TO RIGID FLANGE. FROM RIGID FLANGE THROUGH METER VALVES AND BYPASS TO BE DUCTILE IRON PIPE, K-COPPER OR BRASS.
3. ALTERNATE DESIGN MAY BE SUBMITTED TO WATER ENGINEERING FOR APPROVAL.
4. FLOOR DRAIN IS REQUIRED IN ROOM WHERE METER & BACKFLOW PREVENTER ARE LOCATED
5. PROVIDE SPREADER FOR PROPER ALIGNMENT ON INSTALLATION OF METER SPREAD.
6. ADJACENT WALL CLEARANCE - 18" MINIMUM
7. PROVIDE 1/2" CONDUIT WITH PULL STRING TO OUTSIDE OF BUILDING FOR AMR.
8. ALL METERS MUST INCLUDE STRAINERS.
9. BADGER METER MODEL 25 ⅝" X ⅝" X ½" HR-E LCD W/ 308 CONNECTOR.

GENERAL NOTE: CONTACT WATER ENGINEERING FOR ANY SITUATION NOT COVERED IN STANDARDS

DRAWING NOT TO SCALE

COMBINATION METER LAYOUT IN BUILDING

CITY OF BOWLING GREEN
PUBLIC WORKS DEPARTMENT
ENGINEERING DIVISION

STD DWG 15
SH 2 OF 5
REV 03/2019

3" & 4" METER PIT INSTALLATION
(FOR OFF ROAD USE ONLY)

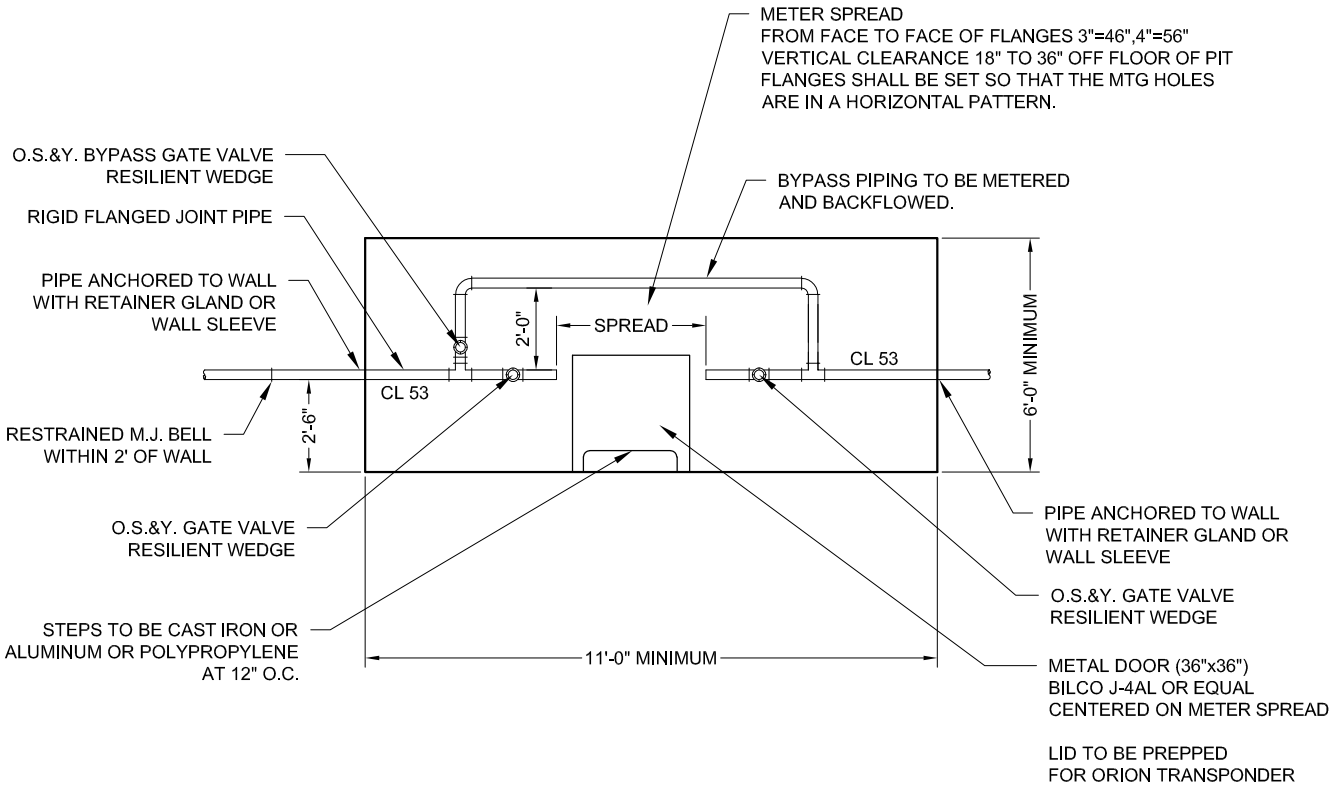

NOTE:

1. DIMENSIONS SHOWN ARE INSIDE MEASUREMENTS OF PIT.
2. ALL PIPE SHALL BE CLASS 53 DUCTILE WITH FLANGED ENDS.
3. ALL VALVES SHALL BE FLANGED END, HANDWHEEL OPERATED, O.S.&Y. GATE VALVES, RESILENT WEDGE.
4. PIT SHALL HAVE AN INSIDE HEIGHT OF 6' MINIMUM, FROM TOP OF FLOOR.
5. PROVIDE SPREADER FOR PROPER ALIGNMENT ON INSTALLATION OF METER SPREAD.
6. WALLS TO BE FORMED IN-PLACE OR PRECAST CONCRETE.
7. TOP SLAB TO BE DESIGNED BY REGISTERED ENGINEER OR ARCHITECT AND APPROVED BY ENGINEERING.
8. BOTTOM OF PIT SHALL BE A CONCRETE SLAB WITH SUMP HOLE.
9. PIPING AND METER SHALL BE SUPPORTED AS APPROVED BY THE ENGINEER, AND WATER DISTRIBUTION.
10. ALTERNATE DESIGN MAY BE SUBMITTED FOR APPROVAL.
11. CLEARANCE MUST BE PROVIDED FOR COMBINATION SERVICES IN PIT INSTALLATIONS. SUBMIT FOR APPROVAL.
12. PROVIDE ELECTRIC FOR LIGHTING AND SUMP PUMP.
13. ALL METERS MUST INCLUDE STRAINERS. (FIVE PIPE DIAMETERS UPSTREAM OF METER)

GENERAL NOTE: CONTACT ENGINEERING FOR ANY SITUATION
NOT COVERED IN STANDARDS

DRAWING NOT TO SCALE

3" & 4" METER PIT INSTALLATION

CITY OF BOWLING GREEN
PUBLIC WORKS DEPARTMENT
ENGINEERING DIVISION

STD DWG 15
SH 3 OF 5
REV 03/2019

6" & LARGER METER PIT INSTALLATION
(FOR OFF ROAD USE ONLY)

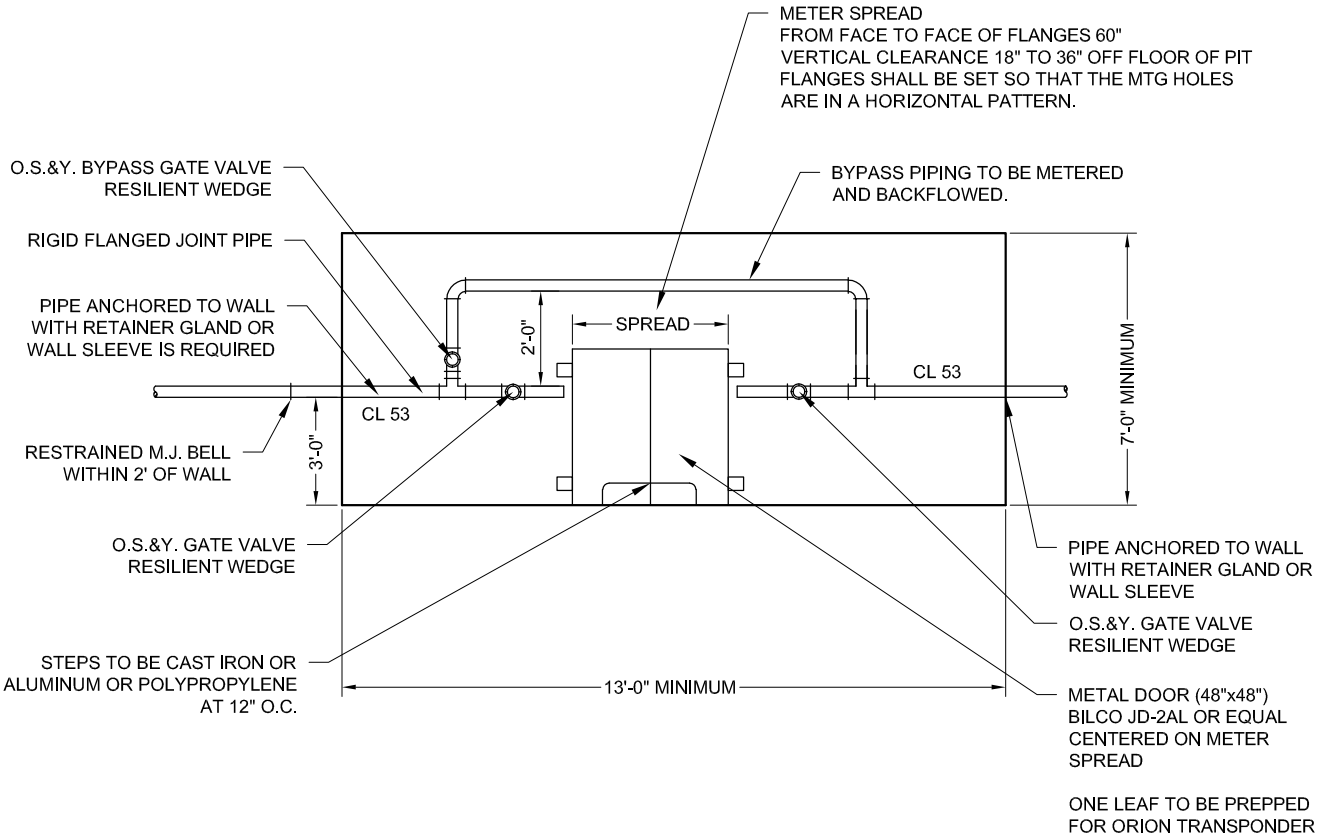

NOTE:

1. DIMENSIONS SHOWN ARE INSIDE MEASUREMENTS OF PIT.
2. ALL PIPE SHALL BE CLASS 53 DUCTILE WITH FLANGED ENDS.
3. ALL VALVES SHALL BE FLANGED END, HANDWHEEL OPERATED, O.S.&Y. GATE VALVES, RESILENT WEDGE.
4. PIT SHALL HAVE AN INSIDE HEIGHT OF 6' MINIMUM, FROM TOP OF FLOOR.
5. PROVIDE SPREADER FOR PROPER ALIGNMENT ON INSTALLATION OF METER SPREAD AND BACKFLOW PREVENTER DOUBLE CHECK ASSEMBLY.
6. WALLS TO BE FORMED IN-PLACE OR PRECAST CONCRETE.
7. TOP SLAB TO BE DESIGNED BY REGISTERED ENGINEER OR ARCHITECT AND APPROVED BY WATER ENGINEERING.
8. BOTTOM OF PIT SHALL BE A CONCRETE SLAB WITH SUMP HOLE.
9. PIPING AND METER SHALL BE SUPPORTED AS APPROVED BY THE ENGINEER, AND WATER DISTRIBUTION.
10. ALTERNATE DESIGN MAY BE SUBMITTED FOR APPROVAL.
11. CLEARANCE MUST BE PROVIDED FOR COMBINATION SERVICES IN PIT INSTALLATIONS. SUBMIT FOR APPROVAL.
12. PROVIDE ELECTRIC FOR LIGHTING AND PUMPING.
13. ALL METERS MUST INCLUDE STRAINERS. (FIVE PIPE DIAMETERS UPSTREAM OF METER)

GENERAL NOTE: CONTACT ENGINEERING FOR ANY SITUATION NOT COVERED IN STANDARDS

DRAWING NOT TO SCALE

6" & LARGER METER PIT INSTALLATION	
CITY OF BOWLING GREEN PUBLIC WORKS DEPARTMENT ENGINEERING DIVISION	STD DWG 15 SH 4 OF 5 REV 03/2019

LIMITED AREA SPRINKLER SYSTEM FROM EXISTING DOMESTIC WITH NO BACKFLOW DEVICE REQUIRED

NOTE:

ADDITION OF BACKFLOW DEVICE ONTO EXISTING FIRE SUPPRESSION SYSTEMS WILL AFFECT ORIGINAL FLOW CALCULATIONS.

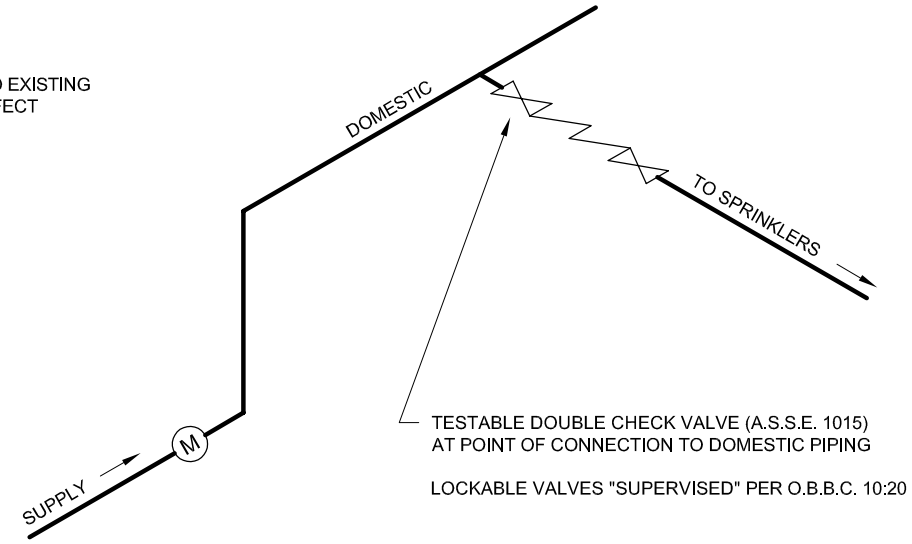

LIMITED AREA SPRINKLER SYSTEM

NOTE:

ADDITION OF BACKFLOW DEVICE ONTO EXISTING FIRE SUPPRESSION SYSTEMS WILL AFFECT ORIGINAL FLOW CALCULATIONS.

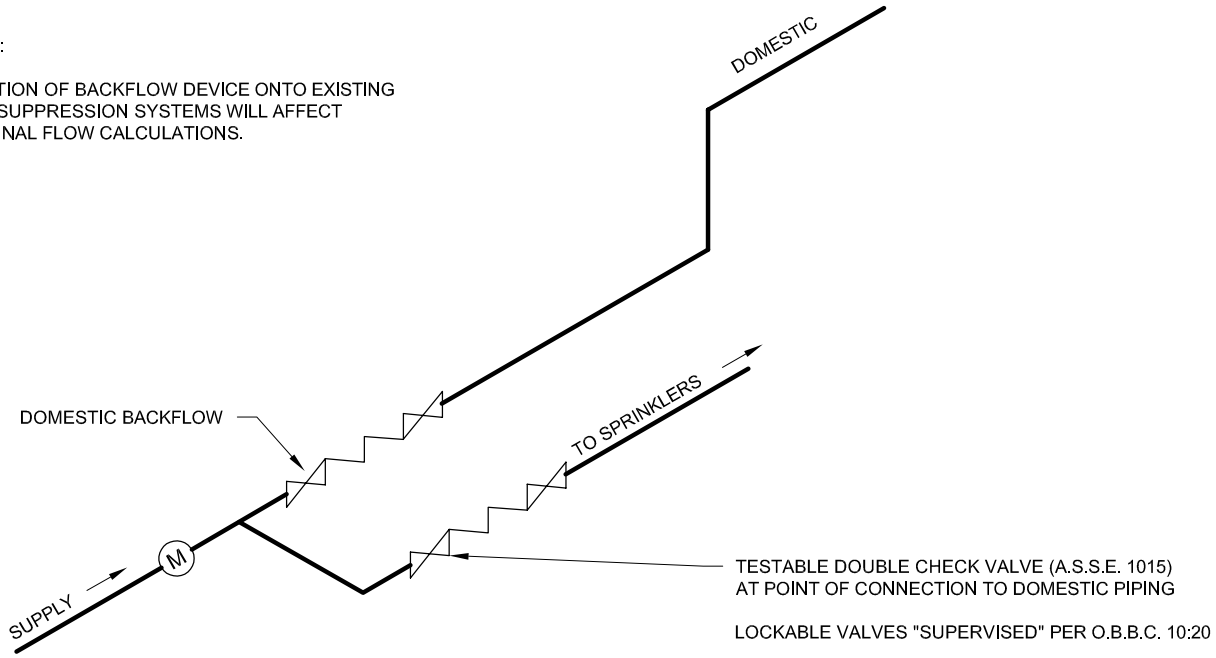

DRAWING NOT TO SCALE

LIMITED AREA SPRINKLER SYSTEMS

CITY OF BOWLING GREEN
PUBLIC WORKS DEPARTMENT
ENGINEERING DIVISION

STD DWG 15
SH 5 OF 5
REV 03/2019

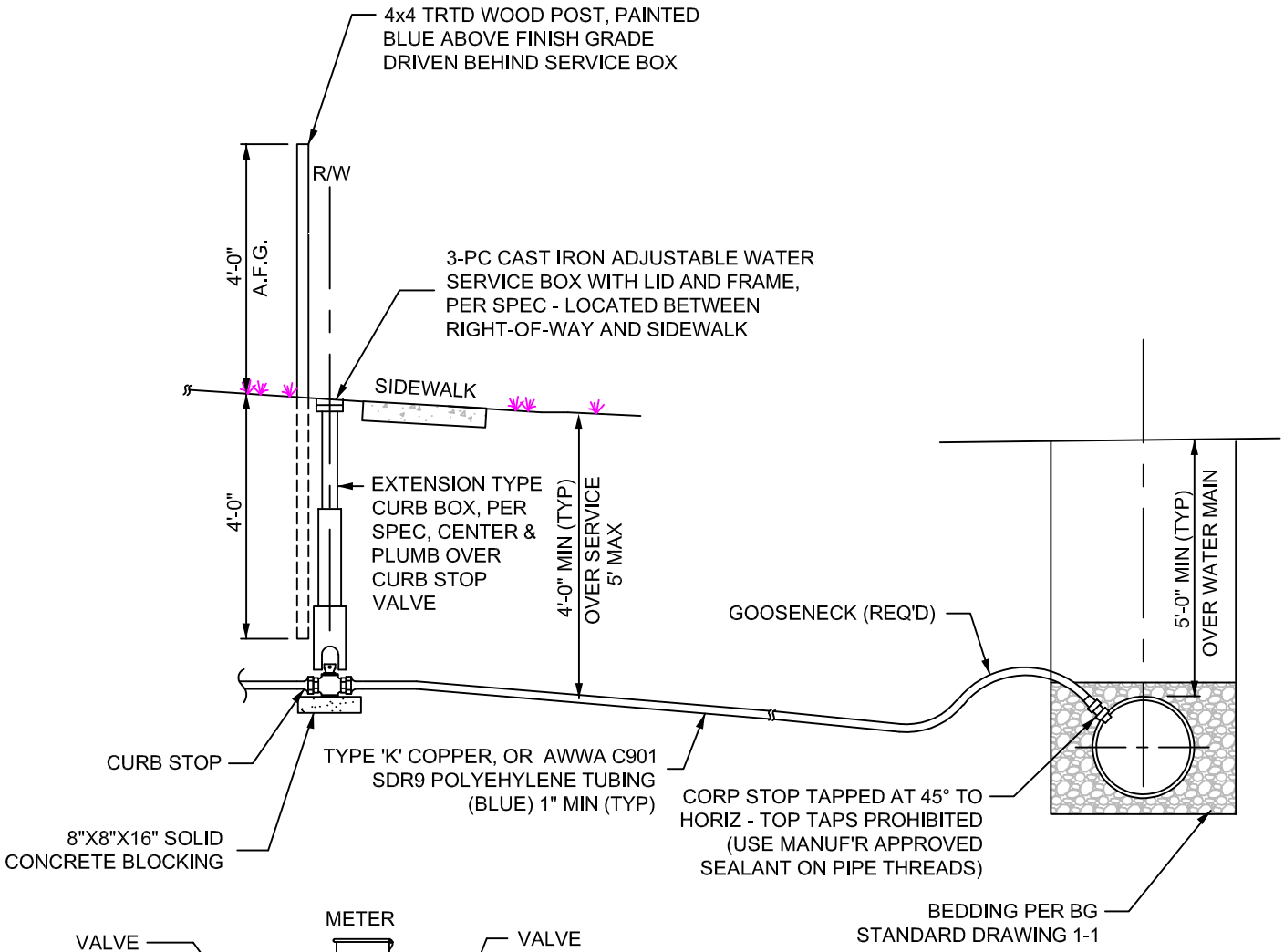

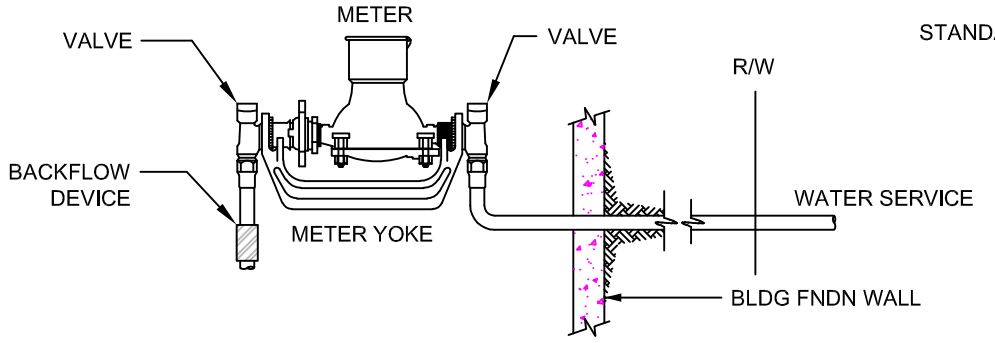

INSIDE SERVICE CONNECTION (FOR METERS 5/8" x 3/4", UP TO 1")

METER NOTES:

1. NO VALVE SHALL BE INSTALLED BETWEEN CURB BOX AND METER SETTING.
2. 1 1/2" AND 2" METER VALVES SHALL BE GATE VALVES OR BALL TYPE.
3. 3" METERS AND LARGER REQUIRE RW GATE VALVES.
4. BACKFLOW PREVENTION DEVICE REQUIRED IMMEDIATELY FOLLOWING METER VALVE. TESTABLE DEVICE SHALL BE INSTALLED FOR COMMERCIAL PROPERTIES.
5. METERS LARGER THAN 1" ARE INSTALLED USING FLANGES.
6. VALVES AND YOKE ARE AVAILABLE FROM THE CITY OF BOWLING GREEN - DEPARTMENT OF WATER AND SEWER
7. METER SHALL BE INSTALLED IN ACCESSIBLE LOCATION APPROVED BY WATER DIVISION.
8. INSTALL METER MINIMUM 12 INCHES FROM WALL.

WATER SERVICE & METER DETAIL

CITY OF BOWLING GREEN PUBLIC WORKS DEPARTMENT ENGINEERING DIVISION	STD DWG 16
	SH 1 OF 1
	REV 03/2019