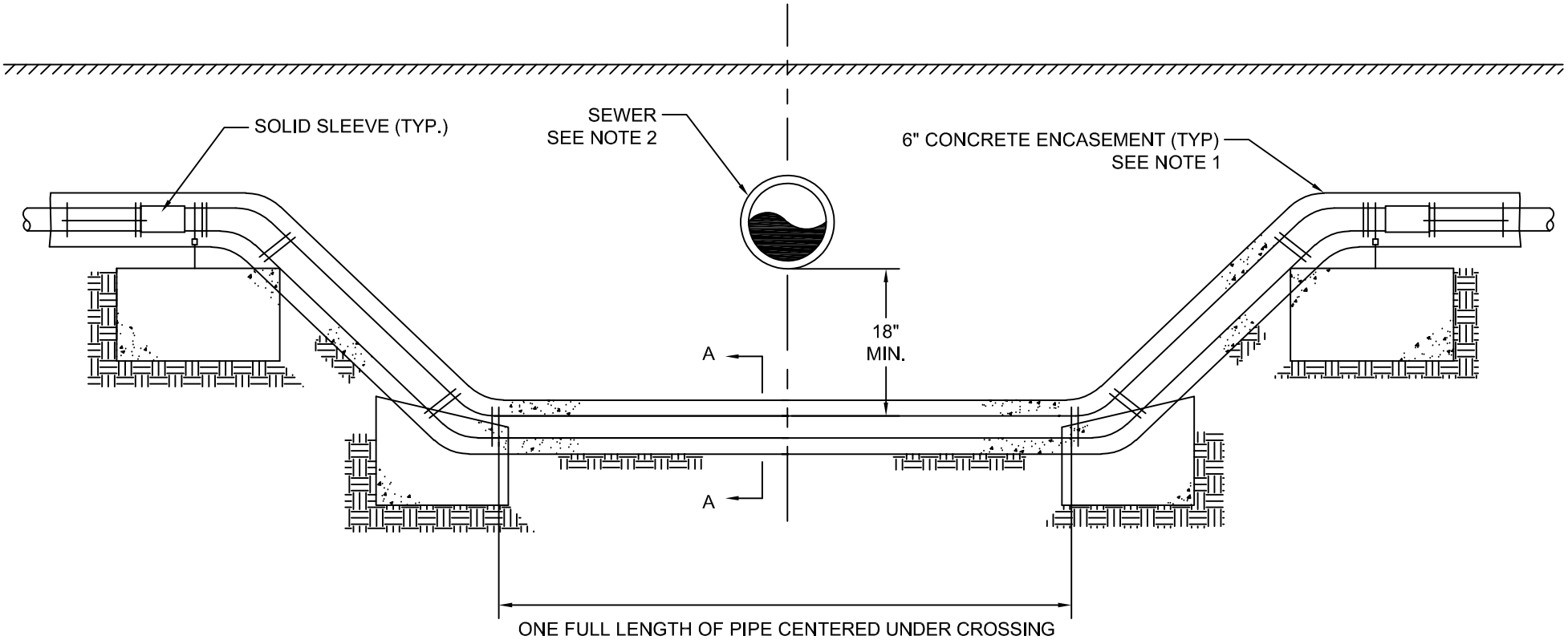

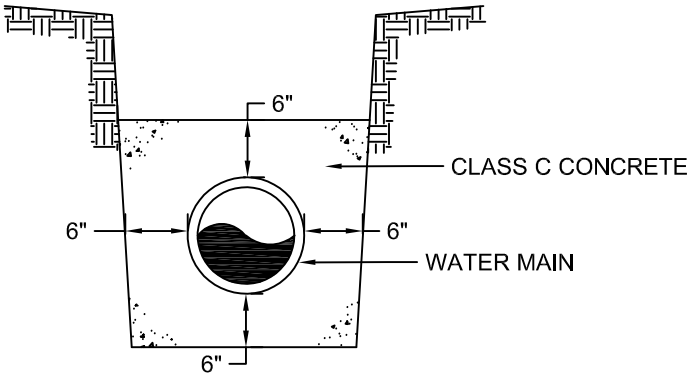

SECTION A-A

NOTES:

1. CONCRETE ENCASEMENT DETAILS SHALL APPLY WHERE A WATERLINE CROSSES AN EXISTING OR PROPOSED SEWER WITH LESS THAN 18" VERTICAL OR 10" HORIZONTAL SEPARATION. NO CONCRETE ENCASEMENT SHALL BE REQUIRED WHEN 18" OR MORE VERTICAL OR 10' HORIZONTAL SEPARATION IS PROVIDED BETWEEN THE WATERLINE AND SEWER.
2. SEWER MAY BE CONSTRUCTED TO WATERLINE PIPE STANDARDS AS AN ALTERNATE TO CONCRETE ENCASEMENT OF WATER MAIN.

WATERLINE LOWERING AND ENCASEMENT DETAIL

CITY OF BOWLING GREEN
PUBLIC WORKS DEPARTMENT
ENGINEERING DIVISION

STD DWG 9
SH 1 OF 1
REV 03/2019