TYPICAL METER PIT DETAIL

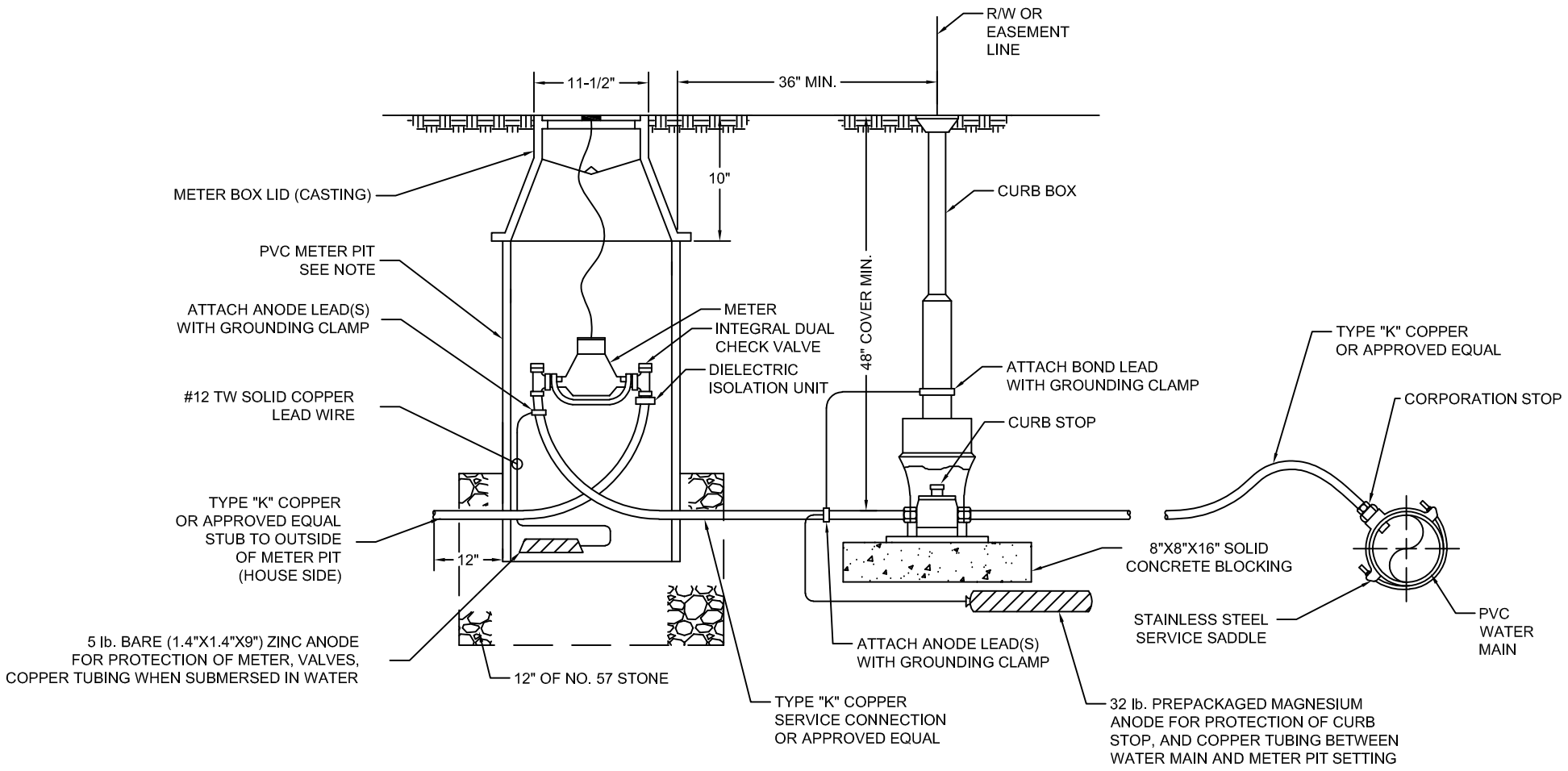

NOTE: CONTACT CITY OF BOWLING GREEN WATER DEPARTMENT FOR METER PIT SPECIFICATIONS.

METER PIT DETAIL WITH CATHODIC PROTECTION	
CITY OF BOWLING GREEN PUBLIC WORKS DEPARTMENT ENGINEERING DIVISION	STD DWG 8
	SH 3 OF 3
	REV 03/2019