TRAP DETAIL

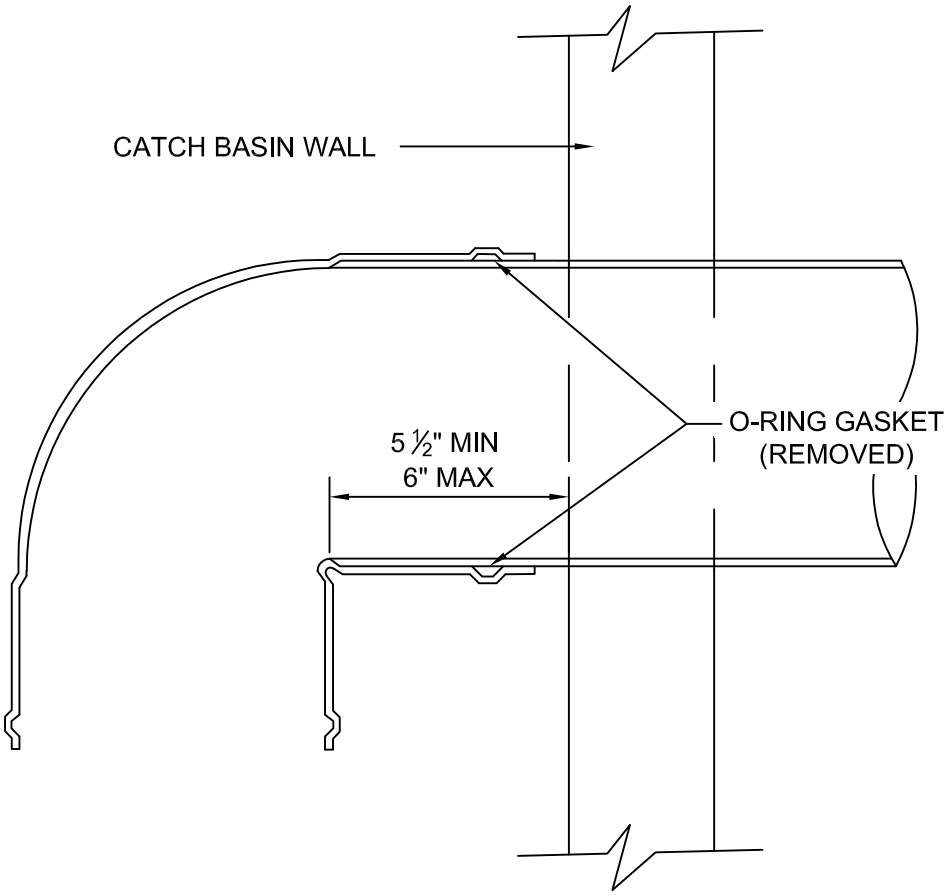

NOTE: TRAP FOR COMBINATION SEWER ONLY

CATCH BASIN DETAIL **TRAP DETAIL**	
CITY OF BOWLING GREEN PUBLIC WORKS DEPARTMENT ENGINEERING DIVISION	STD DWG 4 SH 2 OF 2 REV 03/2019