SEWER MAIN SERVICE CONNECTION

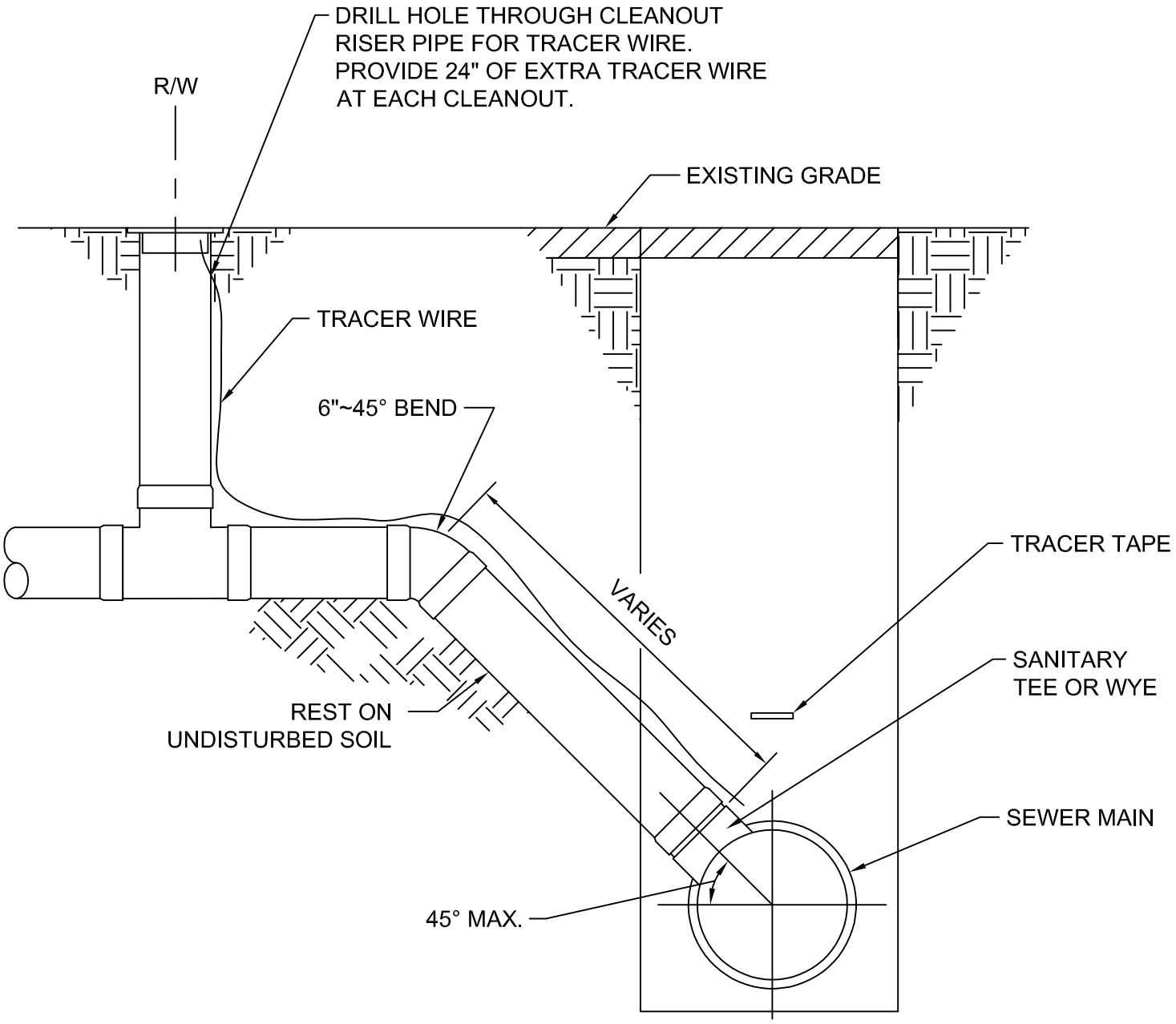

NOTE: SEE STD DWG 2 SHT 1 FOR TRENCH
BEDDING & BACKFILL INFORMATION

SEWERLINE SERVICE CONNECTION	
CITY OF BOWLING GREEN PUBLIC WORKS DEPARTMENT ENGINEERING DIVISION	STD DWG 2 SH 3 OF 3 REV 03/2019