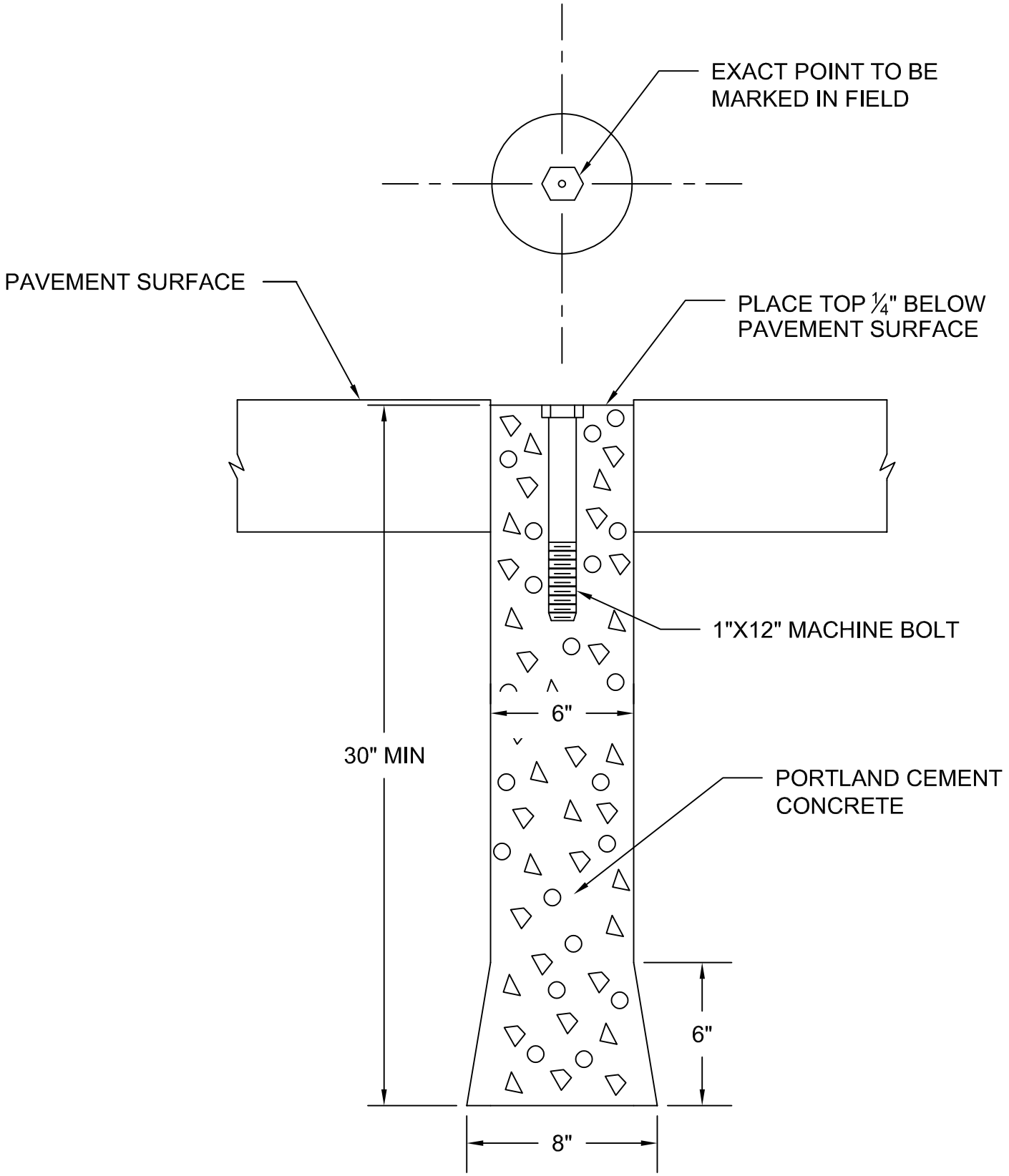

STANDARD MONUMENT DETAIL

CITY OF BOWLING GREEN PUBLIC WORKS DEPARTMENT ENGINEERING DIVISION	STD DWG 11 SH 1 OF 1 REV 03/2019