NOTES:

1. CONCRETE TO HAVE A MINIMUM 28-DAY COMPRESSIVE STRENGTH 4000 PSI.
2. PIPE PENETRATIONS SHALL BE AS SHOWN ON PLAN AND PROFILE DRAWINGS.
3. PROVIDE BUTTERFLY VALVES IN ACCORDANCE WITH AWWA C504 MANUFACTURED BY MUELLER CO. (LINESEAL III) OR APPROVED EQUAL.
4. IF VERTICAL DISTANCE FROM OPERATING NUT TO TOP OF CASTING EXCEEDS 7-FEET, PROVIDE VALVE STEM EXTENSION AND STEM GUIDES.
5. BUTTERFLY VALVE DETAIL IS FOR WATERLINES 16" AND LARGER.

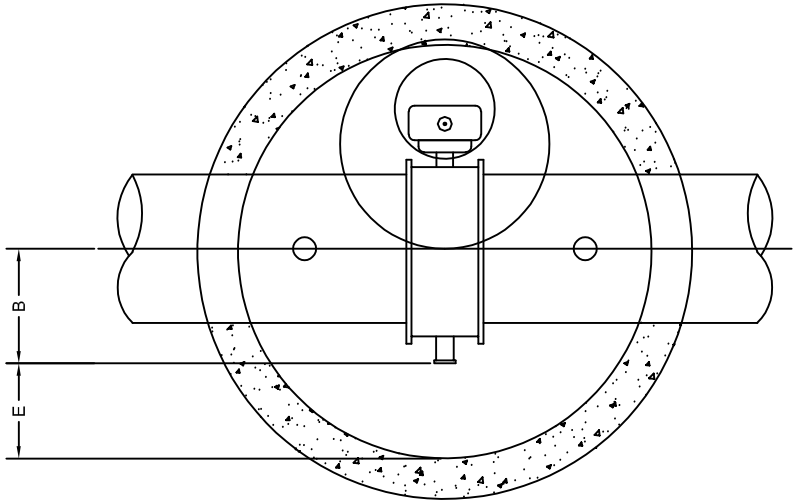

CIRCULAR STRUCTURE PLAN

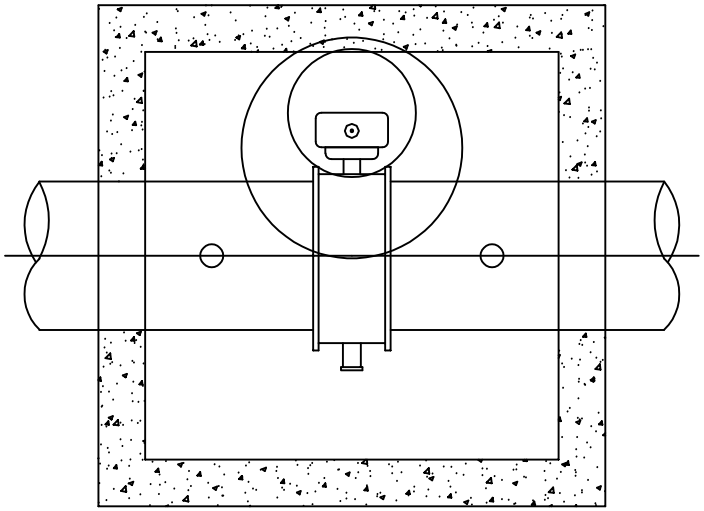

SQUARE STRUCTURE PLAN

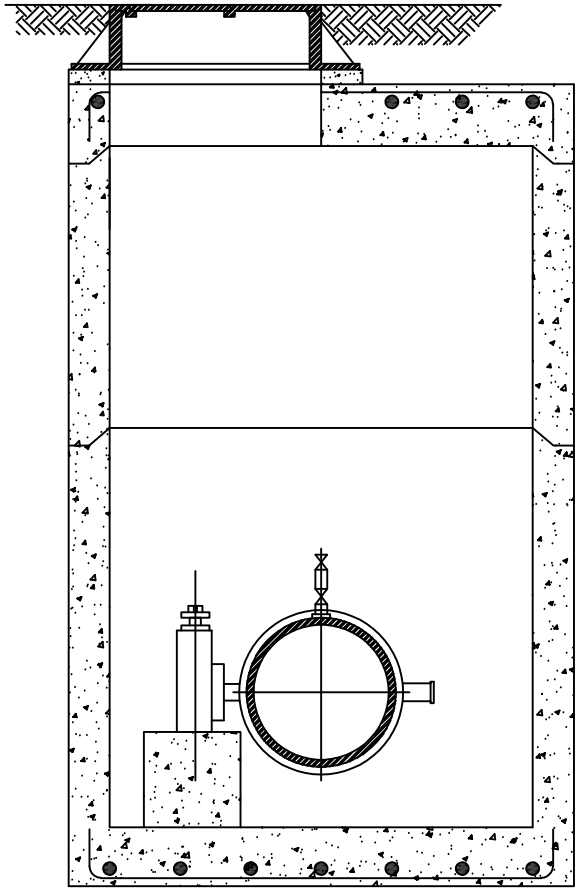

SECTION A-A

LINE SIZE (IN.)	MH SIZE (IN.)	MH SHAPE	MH WALL THICKNESS (IN.)	A (IN.)	B (IN.)	C (IN.)	D (IN.)	E (IN.)	F (IN.)	G (IN.)
16	60	CIRCULAR	6	16	14.5	6	8	15.5	12.5	14
20	72	SQUARE	8	19	17	7	10	19	10.5	17
24	72	SQUARE	8	22.5	18.5	8	5.5	17.5	10.5	13.5
30	78	SQUARE	8	25.5	24.5	8	5.5	14.5	10.5	13.5
36	90	SQUARE	8	29.5	28	9	6.5	17	10.5	13.5

BUTTERFLY VALVE DETAIL

CITY OF BOWLING GREEN
PUBLIC WORKS DEPARTMENT
ENGINEERING DIVISION

STD DWG 10
SH 1 OF 3
REV 03/2019